	4X250 MW BRBCL NABINAGAR TPP LIME FEEDING / DOSING SYSTEM TECHNICAL SPECIFICATION (C&I PORTION)	SPECIFICATION No: PE-TS-463-571-A102
		SECTION : I
		SUB-SECTION : C-4
		REV. 00

SECTION: I

SUB-SECTION: C-4

TECHNICAL SPECIFICATION (C&I PORTION)

910/2020/PS-PEM-MAX

	4X250 MW BRBCL NABINAGAR - FGD	SECTION: C
	TECHNICAL REQUIREMENTS (C&I) LIME DOSING SYSTEM	

CONTROL AND INSTRUMENTATION FOR LIME DOSING SYSTEM

बीएचईएल BHEL	4X250 MW BRBCL NABINAGAR - FGD		DESG	KKM 13/03/2020
	JOB NO: 463		CHKD	KKM 13/03/2020
	REV. NO. 00	DATE: 13.03.2020	APPD	RKR 13/03/2020

INDEX

S. No.	DESCRIPTION
1	TITLE SHEET
2	INDEX SHEET
3	C&I SPECIFIC TECHNICAL REQUIREMENT
4	GENERAL TECHNICAL REQUIREMENTS
5	LIST OF DOCUMENTS/DELIVERABLES
6	SPECIFICATION FOR MEASURING INSTRUMENTS (PRIMARY & SECONDARY),ELECTRICAL ACTUATOR AND LCP
7	INSTRUMENTATION CABLE, CABLE INTERCONNECTION AND TERMINATION PHILOSOPHY
8	INSTRUMENT STUB DETAILS
9	INSTRUMENT INSTALLATION DRAWING
10	SIGNAL EXCHANGE BETWEEN DRIVES AND DCS
11	DRIVE AND INSTRUMENT INTERFACE DIAGRAM
12	QUALITY ASSURANCE FOR INSTRUMENTS & STARTER PANEL/LCP AND TYPE TEST REQUIREMENTS
13	MANDATORY SPARES
14	SUB VENDOR LIST

	C&I SPECIFICATION FOR LIME DOSING SYSTEM	SECTION: C SUB SECTION: C&I

C&I SPECIFIC TECHNICAL REQUIREMENT
FOR DCS BASED
LIME DOSING SYSTEM

Specific Technical Requirements (C&I):

1. LIME DOSING SYSTEM shall be operated from DCS (BHEL's scope).

2. The Contractor shall provide complete Instrumentation along with necessary fittings, accessories and valve manifold etc for control, monitoring and operation of entire LIME DOSING SYSTEM except marked as BHEL's scope in P&ID attached in specification. All instruments shall be provided with durable epoxy coating for housing and all exposed surfaces of the instruments.

3. All the Electronic Transmitter for Pressure, Temperature and DP based Flow /Level measurements shall be genuine, verifiable PROFIBUS PA protocol compatible instruments. The transmitters shall be connected to DDCMIS through PROFIBUS PA protocol complying to IEC 61158 directly from transmitter. This is subject to customer approval and BHEL decision shall be final.

4. Electrical Actuators (as applicable) shall be Non-Intrusive type electric actuators envisaged with integral starter. The interface of these actuators with DCS shall be of two types viz. with Hardwired interface and with PROFIBUS DP interface. All actuator settings including torque, limit shall be possible without opening the actuator cover and LCD indication shall be available integral to actuator body. Open/Close command termination logic suitably built inside the actuator Details shall be referring in the specification.

5. All ON, OFF, and INCHING Type electric actuators shall be PROFIBUS DP compatible. However, the exact protocol shall be based on finalized protocol of DCS. If PROFIBUS DP protocol is envisaged, then actuator shall have two (redundant) PROFIBUS DP ports for connecting the redundant PROFIBUS DP cables. That is if one PROFIBUS DP cable is cut or not working/not available, then complete actuator functionality shall be available through the second redundant cable without any manual intervention.

6. The PROFIBUS protocol design shall be further validated by BHEL and approved by NTPC during detailed engineering and any variation/ changes required based on DDCMIS system requirements and actual field installation, operational philosophy etc. shall be considered by bidder without any implications.

7. The requirements given are to be read in conjunction with detailed Technical specification enclosed in the specification. Further in case of any discrepancy in the requirement within the same section noted by the bidder in the specification, the same will be brought to the notice of BHEL in the form of pre- bid clarification. In absence of any pre-bid clarification, the more stringent requirement as per interpretation of customer shall prevail without any commercial implication.

8. The make of the items shall be from sub-vendor list. However, the make/model of various instruments/items/systems shall be subject to approval of owner/purchaser during detailed engineering stage. No commercial and delivery implication in this regard shall be acceptable. In case of any conflict or repetition of clauses in the specification, the more stringent requirements among them are to be complied with.

9. All transmitters shall be suitably grouped together and mounted inside (i) Local Instruments Enclosures (LIEs) in case of open areas of the plant and (ii) In Local Instrument Racks (LIRs) in case of covered areas.

10. All instruments (except PROFIBUS PA compatible transmitters) and control elements shall be terminated on JB/LCP in field and JB/LCP are in bidder's scope for bidder's supplied instrument and in BHEL's scope for BHEL's supplied instrument. Number of Junction Boxes shall be sufficient and positioned in the field to minimize local cabling (max 12-15 mtrs) and trunk cable.

11. The contacts of equipment mounted instruments; sensors, switches etc. For external connection including spare contacts shall be wired out to suitably located junction boxes by bidder.

12. For cable scope refer to electrical scope between BHEL and vendor defined in electrical specification.

13. The design, manufacture, inspection, testing, site calibration and installation of all C&I equipment and systems covered under this specification shall conform to the latest editions of applicable codes and standards.

14. Bidder to provide mandatory spares as per mandatory spares list.

15. The specifications for instruments mentioned in the specification are minimum requirements. The detail specifications shall be finalized during detail engineering. The bidders shall specifically mention any deviation they would like to take on the C&I specification. In absence of only deviation, a No deviation certificate is to be furnished.

16. The quantity of instruments for the system shall be as per tender P &ID wherever provided of the respective system as a minimum, for bidding purpose. However, Bidder shall also include in his proposal all the instruments and devices that are needed for the completeness of the plant auxiliary system/ equipment supplied by the bidder, even if the same is not specifically appearing in the P & ID. During detail engineering if any additional instruments are required for safe & reliable operation of plant, bidder shall supply the same without any price implication.

17. Bidder to provide input/output list, drives list, junction box schedule and termination details, recommended control logics / write-up etc. the list of documents to be submitted after award of contract is to be referred by bidder.

18. All the transmitters supplied by Bidder shall be rack mounted. The transmitter racks shall be in Bidder's scope of supply. All transmitters shall be HART compatible.

19. Bidder to perform tests of C&I items/instruments/systems as per Quality plans/type test attached in the specification. However, if any test not specified in the quality plan but specified in specification Tests for I&C equipment included elsewhere in specification will have to perform by Bidder without any cost implication.

20. Instrument installation and accessories required for the same shall be in Bidder's scope and shall be submitted after award of contract. However, any instrument/ analyser installation not covered in the same shall be subject to customer and BHEL approval during detailed engineering. Bidder to provide erection hardware including junction boxes, canopies, structural steel as required.

21. Provision for separate Terminal block/wiring diagram for power and control blocks of control panel to be ensured.

22. Bidder to provide Flow measuring device suitable for the service condition, which shall be decided by BHEL/customer during detail engineering. Bidder to comply the requirement without any commercial implication.

23. Bidder to furnish electrical load/UPS load data during detailed engineering.

24. 415VAC /230 V UPS Power supply shall be provided by BHEL at a single point, further distribution to various instruments/equipment of the system shall be in bidder scope. Bidder to include necessary power distribution board in his scope. Any power supply other than the above, if required by any instrument/equipment has to be derived by the bidder from the above supply & all necessary hardware for the same shall be in bidder scope. Bidder to submit the power requirement along with the bid.

25. Power supply derived for contact interrogation, interposing relay and solenoid shall generally be ungrounded 24 V D.C. only.

26. Interface of MCC, HT SWGR, Solenoid valves, field instruments, Actuators etc. with DDCMIS based control system shall be as per Drive Control Philosophy enclosed in specification.

27. Local control panel , if any required for operation shall be in bidder scope.

28. The solenoid operated valves/Dampers/Gate shall have a limit switch for open/close feedback. Solenoid Valve shall be rated for 24V Dc only.

29. All field instruments enclosure shall be IP65, local panel/cabinet enclosure shall be IP 55, unless otherwise specified.

30. Diaphragm seal shall be provided with Instruments having contact with corrosive media.

31. To ensure availability, adequate redundancy in system design shall be provided at hardware, software and sensor level. For the protection system, independent sensing device shall be provided to ensure adequate safety of plant equipment.

32. Redundancy of sensors shall be provided by bidder

    (i) Triple redundancy for all Analog and binary inputs required for protection of system/drives.
    (ii) For all other control functions dual redundancy of the sensors shall be provided by the bidder.

33. Double root valve shall be provided for all pressure tapings where the pressure exceeds 40kg/cm2.

34. Use of process actuated shall be avoided unless unavoidable.

35. Number of pairs to be selected for Screen /Control cable
    a) F-Type: 2P/4P/8P/12P (Size: 0.5sqmm2)
    b) G-Type: 2P/4P/8P/12P (Size: 0.5sqmm2)
    c) Core Cable: 3CX2.5sqmm2/ 5CX2.5sqmm2/ 12CX1.5sqmm2

36. Instrument installation shall be as per the attached "Standard Hook-up diagram of instrument."

37. In addition to requirements specified here, all C&I systems/ sub-systems/ equipment/ devices shall also meet other requirements stipulated under other Sub-sections/ parts/ sections of specification. In case of any conflict and repetition of clauses in the specification, BHEL discretion will prevail.The requirements given are to be read in conjunction with detailed Technical specification enclosed.

38. All field instruments shall be weatherproof, drip tight, dust tight and splash proof suitable for use under outdoor ambient conditions prevalent in the subject plant. All field-mounted instruments shall be mounted in suitable locations where maximum accessibility for maintenance is achieved. All the field instruments shall also be provided with SS tag nameplate and double compression type Nickel-plated brass cable gland. Gaskets, Fasteners, Counter and mating flange (SS316 material), nuts & bolts etc. shall also be included, wherever required with the field instruments.

39. All the outdoor field instruments such as analysers/transmitters/meters etc. shall be provided with suitable Free standing cabinet(s)/panel/rack/canopy so that the equipments are protected against rain/ sunlight etc.

40. All instruments should be supplied with valid calibration and test certificates provided by OEM.

41. At least 20% spare unused terminals shall be provided everywhere including local junction boxes, instrument racks/enclosures, termination/marshalling cabinets, etc.

42. Drive control philosophy/signal exchange list attached elsewhere in the specification are Tentative. Shall be finalized during detailed engineering.

43. Contractor shall furnish Instrument Schedule, I/O list, Drive list, Cable Schedule, Cable interconnection (DCS end terminal details shall be provided to vendor during detail engineering to incorporate in cable interconnection), JB grouping, Annunciation list, SOE list, List of Instruments/devices for HART in BHEL approved format. Also reusable database format like MS Excel, MS Access etc. of these documents shall also be provided by Contractor in BHEL approved format. Soft copy of the formats shall be provided to the successful bidder.

Note:-

1. All equipment items shall be of latest design with proven on track record.

2. The above given scope is indicative & minimum. Any item/ equipment not indicated above however required for the completeness of the system is to be supplied by bidder without any technical, commercial and delivery implication to BHEL.

3. Documents of C&I System shall be submitted to end user/owner for approval during detail engineering. Changes, if any, shall be accommodated by the bidder without any price/time implication.

	C&I SPECIFICATION FOR LIME DOSING SYSTEM	SECTION: C SUB SECTION: C&I

GENERAL TECHNICAL REQUIREMENTS (LIME DOSING SYSTEM)

FORM NO. PEM-6666-0

	SPECIFICATION FOR CONTROL & INSTRUMENTATION FOR AUX PACKAGES	SPECIFICATION NO.:	
		VOLUME	
		SUB SECTION	
		REV. NO.	DATE :
		SHEET	OF

GENERAL REQUIREMENT

1.0 Bidder shall provide complete and independent control & instrumentation system with all accessories, auxiliaries and associated equipments for the safe, efficient and reliable operation of auxiliary systems.

2.0 The quantity of instruments for auxiliary system shall be as per tender P &ID wherever provided of the respective system as a minimum, for bidding purpose. However, Bidder shall also include in his proposal all the instruments and devices that are needed for the completeness of the plant auxiliary system/ equipment supplied by the bidder, even if the same is not specifically appearing in the P & ID. During detail engineering if any additional instruments are required for safe & reliable operation of plant, bidder shall supply the same without any price implication.

3.0 Measuring instruments/equipment and subsystems offered by the bidder shall be from reputed experienced manufacturers of specified type and range of equipment, whose guaranteed and trouble free operation has been proven. Further all the instruments shall be of proven reliability, accuracy, and acceptable international standards and shall be subject to employer's approval. All instrumentation equipment and accessories under this specification shall be furnished as per technical specification, ranges, makes/ numbers as approved by the employer' during detail engineering.

4.0 The necessary root valves, impulse piping, drain cocks, gauge-zeroing cocks, valve manifold and all the other accessories required for mounting/ erection of these local instruments shall be furnished, even if not specifically asked for, on as required basis. The contacts of equipment mounted instruments; sensors, switches etc for external connection including spare contacts shall be wired out to suitably located junction boxes.

5.0 The customer specification attached as Specific Technical Requirement will supercede the Data sheets, if there is any mismatch.

	C&I SPECIFICATION FOR LIME DOSING SYSTEM	SECTION: C SUB SECTION: C&I

LIST OF DOCUMENTS/DELIVERABLES

	C&I SPECIFICATION FOR LIME DOSING SYSTEM	SECTION: C SUB SECTION: C&I

LIST OF DELIVERABLES OF PEM - C&I DEPARTMENT			
Sl. No.	**DRAWING NO.**	**DRAWING/DOCUMENT TITLE**	**CATEGORY**
1	PE-V4-463-145-I901	CONTROL & OPERATIONAL WRITE-UP FOR THE SYSTEM WITH SET POINTS	A
2	PE-V4-463-145-I902	CONTROL SCHEME/LOGIC DIAGRAM (TO BE IMPLEMENTED IN DDCMIS)	A
3	PE-V4-463-145-I903	HMI PICTURES/PLANT SCHEMATICS	A
4	PE-V4-463-145-I904	INSTRUMENT SCHEDULE WITH SET POINTS	A
5	PE-V4-463-145-I905	I/O LIST (ANALOG & BINARY)	A
6	PE-V4-463-145-I906	DRIVE LIST/SOLENOID/ACTUATOR VALVE LIST WITH LOCATION DATA	A
7	PE-V4-463-145-I907	FIELD JB/LIE/LIR,DRIVES TERMINATIONS	A
8	PE-V4-463-145-I908	DATASHEETS FOR INSTRUMENTS, JBs, etc.	A
9	PE-V4-463-145-I909	QUALITY PLANS (INSTRUMENTS, VMS, etc.)	A
10	PE-V4-463-145-I910	INSTRUMENT HOOK-UP DRAWING	A
11	PE-V4-463-145-I911	THERMOWELL SIZING CALCULATION	A
12	PE-V4-463-145-I913	CABLE SCHEDULE & INTERCONNECTION	A
13	PE-V4-463-145-I914	ANNUNCIATION & SOE LIST	A

NOTES:
ANY OTHER DOCUMENT DECIDED DURING DETAILED ENGINEERING SHALL BE PROVIDED BY BIDDER WITHOUT ANY COMMERCIAL/TECHNICAL IMPLICATION.

CONTRACTOR TO SUBMIT REUSABLE DATABASE FORMATS IN BHEL/CUSTOMER APPROVED FORMATS LIKE MS EXCEL, MS ACCESS OF DOCUMENTS LIKE INSTRUMENT SCHEDULE, I/O LIST, DRIVE LIST, FIELD JB TERMINATIONS, CABLE SCHEDULE & INTERCONNECTION, etc.
SOFT COPY OF FORMATS SHALL BE PROVIDED TO SUCCESSFUL BIDDERS.

	C&I SPECIFICATION FOR LIME DOSING SYSTEM	SECTION: C SUB SECTION: C&I

SPECIFICATION FOR MEASURING INSTRUMENTS (PRIMARY & SECONDARY), ELECTRICAL ACTUATOR AND LCP.

CLAUSE NO.	TECHNICAL REQUIREMENTS
1.00.00	**MEASURING INSTRUMENTS (PRIMARY AND SECONDARY)**
1.01.00	Measuring instruments/equipment and subsystems offered by the Bidder shall be from reputed experienced manufacturers of specified type and range of equipment, whose guaranteed and trouble free operation has been proven. Refer Sub-section Basic Design Criteria. Further, all instruments shall be of proven reliability, accuracy, and repeatability requiring a minimum of maintenance and shall comply with the acceptable international standards and shall be subject to Employer's approval.
1.02.00	Every panel-mounted instrument requiring power supply shall be provided with easily replaceable glass cartridge fuses of suitable rating. Every instrument shall be provided with a grounding terminal and shall be suitably connected to the panel grounding bus.
1.03.00	All transmitters, sensors, switches and gauges for parameters like pressure, temperature, level, flow etc. as required for the safe and efficient operation and maintenance as well as for operator and management information (including all computation) of equipment in the system under the scope of specification shall be provided on as required basis with in quoted lump sum price. The Contractor shall furnish all Instrumentation / Control equipment & accessories under this specification as per technical specification, ranges, makes & model as approved by the Employer during detailed engineering.
1.04.00	The necessary root valves, impulse piping, drain cocks, gauge-zeroing cocks, valve manifolds and all the other accessories required for mounting/erection of these local instruments shall be furnished, even if not specifically asked for, on as required basis. The contacts of equipment mounted instruments, sensors, switches etc. for external connection including spare contacts shall be wired out in flexible/rigid conduits, independently to suitably located common junction boxes. The proposal shall include the necessary cables, flexible conduits, junction boxes and accessories for the above purpose. Double root valves shall be provided for all pressure tapping where the pressure exceeds 40 Kg./sq.cm.
1.05.00	All instruments envisaged for sea water applications, shall be provided with wetted parts made of Monel/ Hastelloy C or any other material (if provenness experience of the proposed material for such applications is established by contractor). For Chlorine application: Instruments shall be provided with wetted parts (e.g. diaphragm seal, etc.) made of Hastelloy C. Also, filled liquid shall be Fluorolube oil/ Inert Hydrocarbon / CTFE etc., for these applications. For applications of FECL3 solution: Instruments shall be provided with wetted parts (e.g. diaphragm seal, etc.) made of Tantalum.
1.06.00	For coastal areas, all instruments shall be provided with durable epoxy coating for housings and all exposed surfaces of the instruments.
1.07.00	The instruments, for which technical specification is not attached, shall be supplied as per the standard and proven practice of the contractor. The same shall be established by the contractor during detailed engineering by providing detailed explanation/concepts, if required by the employer, of such implementation along with standard documentation.

16.00.00 **FIELD INSTRUMENTS BASED ON FIELDBUS**

The following instruments shall be connected to DDCMIS through fieldbus i.e. FOUNDATION Fieldbus/PROFIBUS PA protocol complying to IEC 61158 directly from transmitter.

16.01.00 **Electronic Transmitter for Pressure, Differential Pressure and DP based Flow / Level measurements.**

S No.	Features	Essential/Minimum Requirements
1.	Type of Transmitter	FOUNDATION Fieldbus/PROFIBUS PA based output

CLAUSE NO.	TECHNICAL REQUIREMENTS		
	2	Accuracy	± 0.060 % of calibrated range (minimum) for calibrated range greater than 400 mmwc. +0.065% of calibrated range (minimum) for calibrated range greater than 250 kg/cm2. ± 0.10 % of calibrated range (minimum) for calibrated range less than 400 mmwc.
	3.	Stability	0.25 % of calibrated range for 10 years for calibrated range greater than equal to 400 mmwc on standard conditions of manufacturer. 0.2 % of calibrated range for 1 years for calibrated range less than 400 mmwc on standard conditions of manufacturer. 0.15% of calibrated range for 5 years for DPT with static pressure greater than 250 kg/cm2.
	4	Turn down	50:1 for greater than or equal to span of 400mmwcl. 20:1 for span below 400mmwcl. 10:1 for span greater than 250 kg/cm2
	(Above mentioned (2,3,4) parameters/features of offered models shall be strictly as defined in standard published catalogue of the manufacturer only).		
	5	Housing	Weather proof as per IP-67, metallic housing with durable corrosion resistant coating
	6.	Electrical connection	½" NPT(F) FOUNDATION Fieldbus/PROFIBUS PA compatible
	7.	Process connection	½" NPT (F)
	8.	Operating Ambient temperature	85 deg C without display. 70 deg C with display.
		Overpressure	150% of max operating pressure
	9	Accessories	-Diaphragm seal, pulsation dampeners, syphon etc. as required by service and operating condition. -2 valve manifold for absolute & gauge pressure transmitters, -3-valve for DP and 5 valve manifold for level/flow applications. -The valve manifold shall be non-integral type. -For hazardous area, enclosure as described in NEC article 5.

10.	Mounting	2 inch pipe mounting with Enclosure/Rack/Canopy.
11.	Diagnostics & display	Self-Indicating feature and digital display on transmitter

Notes

- For primary air/ secondary air/flue gas/ furnace pressure applications, DP type transmitters shall be provided for pressure measurement below 2000 mmwc.
- LVDT type is not acceptable.
- Where the process fluids are corrosive, viscous, solid bearing or slurry type, diaphragm seals shall be provided. Parts below the diaphragm shall be removable for cleaning. The entire volume above the diaphragm shall be completely filled with an inert liquid suitable for the application.

2.02.00 **GUIDED WAVE RADAR TYPE LEVEL TRANSMITTER**

Type	Microprocessor based 2 wire type (loop powered), HART protocol compatible Guided wave radar transmitter.
Principle	TDR (Time domain reflectometry)
Probe Type & Material	(i) Coaxial probe of SS316/316L. If required, probe shall be suitable for overfill prevention. (ii) Rod probe, cable probe of SS316/SS316L can be used for applications wherever coaxial probe is not suitable.
Output signal	4-20 mA DC along with superimposed digital signal (based on HART protocol), suitable for over fill prevention.
Accuracy	+/- 0.5% of calibrated span or minimum 5mm.
Power supply	24 VDC +/- 10%.
Housing	Weather proof as per IP-65, metallic housing with durable corrosion resistance coating.

Adjustment/ calibration	Using hand held HART calibrator/ centralized PC based system (as applicable).
Zero & span adjustment	Continuous, temper proof, remote as well as manual adjustability from instrument. It should be possible to calibrate the instrument without any level in the tank/sump etc.
Display	Integral digital display.
Load Impedance	500 ohms (minimum).
Electromagnetic compatibility	Shall meet EN 61326-1 (1997) and AmdtA1, class A equipment/EN 50081-2 & EN 5008 1-2 & EN 50082-2
Mounting	(i) External cage shall be provided where ever side mounting is required. External cage and other mounting accessories to be provided by the contractor. (ii) Where ever top mounting is required, all mounting accessories, stilling well (as required) etc., shall be provided by the contractor. (iii) All weather canopy shall be provided for protection from direct sunlight and direct rain for open locations.

Note: Four wire type transmitters can also be provided for applications where 2- wire transmitter has some technical limitations, subject to employer's approval during detailed engineering stage. However, in such cases isolated 4-20 mA DC (analog) output shall be provided. Power supply required for such transmitters shall be 240V AC / 24V DC.

2.03.00 **Ultrasonic Type level Transmitter**

S.No.	Features	Essential/Minimum requirement
1.	Type of Transmitter	Non-contact Microprocessor based 2 wire type (loop powered), HART protocol compatible Ultrasonic transmitter.
2.	Output signal	4-20 mA DC (Analog) along with superimposed digital signal (based on HART protocol).

3.	Accuracy	+/- 0.5% of calibrated span or minimum 5mm.
4.	Power supply	24 V DC +/- 10%.
5.	Temperature compensation	To be provided within transducer.
6.	Housing	Weather proof as per IP-65, metallic housing with durable corrosion resistance coating.
7.	Adjustment/calibration/ maintenance	Using hand held HART calibrator/ centralized PC based system (as applicable). .
8.	Zero and Span adjustment	Continuous, tamper proof, remote as well as manual adjustability from instrument. It should be possible to calibrate the instrument without any level in the tank/sump etc.
9.	Sensor Material	Corrosion resistant material to suit individual application requirement.
10.	False signal tolerance	Transmitter shall be capable of ignoring false echoes from internal tank/sumps obstructions such as pipes, heating coils or agitator blades. Also transmitter shall have adjustable damping circuitry.
11.	Range	Range of transmitter shall be capable of covering the complete level span of tank taking care of blocking distance, frequency attenuation due to surface, obstructions, vapors etc.
12.	Display	Integral digital display
13.	Diagnostics	Loss of echo alarm etc.
14.	Load Impedance	500 ohms (minimum).
15.	Electrical Connection	Plug and socket

16.	Accessories	• All weather canopy shall be provided for protection from direct sunlight and direct rain for open locations. • All mounting accessories required for erection and commissioning shall be provided. • For hazardous area, explosion proof enclosure as described in NEC article 500

Note:

1) Contractor can also provide Radar type transmitter as per above specification in place of ultrasonic transmitter subject to approval by Employer during detailed Engineering. Sonic frequency based transmitters can also be provided under "ultrasonic transmitters" category for fly ash silo level.

2) Four wire type transmitters can also be provided for applications where 2- wire transmitter has some technical limitations, subject to employer's approval during detailed engineering stage. However, in such cases isolated 4-20 mA DC (analog) output shall be provided. Power supply required for such transmitters shall be 240V AC / 24V DC.

3) For applications where transmitter location is not accessible, the transmitter shall have separate sensor unit and electronic unit for such applications. It shall be possible to mount the electronic unit at accessible location.

4.00.00 **SPECIFICATIONS FOR PR. GAUGE, D.P. GAUGE, TEMP. GAUGE AND LEVEL GAUGE.**

Sl. No	FEATURES	ESSENTIAL/MINIMUM REQUIREMENTS		
		Pr. Gauge/ DP Gauge/ Draught gauges	Temperature Gauge	Level Gauge
1	Sensing Element	Bourdon for high pressure, Diaphragm/ Bellow for low pr.	Inert gas actuated/ Liquid filled other than mercury	Tempered * toughened Borosilicate gauge glass steel armoured reflex or transparent type.
2	Material of sensing element	SS 316	SS 316	
3	Material of movement	SS 304	SS 304	
4	Body material	Die-cast aluminium	Die-cast aluminium	Forged carbon steel/304 SS
5	Dial size	150mm	150 mm	Tubular covering entire range
6	End connection	1/2 inch NPT (M)	1/2 inch or 3/4 inch NPT (M).	Process connection as per ASME PTC and drain/vent 15 NB

7	Accuracy	±1% of span	± 1% of span	± 2%
8	Scale	Linear, 270° arc graduated in metric units	Linear, 270° arc graduated in °C	Linear vertical
9	Range selection	Shall cover 125% of max. operating press	Shall cover 125% of max. operating temp	Shall cover max. Operating level.
10	Over range	125% of FSD	125% of FSD	-
11	Housing	Weather and dust proof as per IP-55	Weather and dust proof as per IP-55	CS/304 SS leak proof
12	Zero/span adjustment	Provided	Provided	--
13	Identification	Engraved with service legend or laminated phenolic name plate		
14	Accessories	Blow out disc, siphon, snubber, pulsation dampener, chemical seal (if required by process) gauge isolation valve	SS Thermowell	Gasket for all KEL-F shield for transparent type vent and drain valves of Steel/SS as per CS/Alloy process Requirement.
Notes:-				

*Bicolour type level gauges will be provided for applications involving steam and water except for condensate and feed water services.

Length of gauge glass shall not be more than 1400 mm. If the vessel is higher, multiple gauge glasses with 50 mm overlapping shall be provided.

Where the process fluids are corrosive, viscous, solid bearing or slurry type, diaphragm seals shall be provided. Parts below the diaphragm shall be removable for cleaning. The entire volume above the diaphragm shall be completely filled with an inert liquid suitable for the application.

5.00.00 **PROCESS ACTUATED SWITCHES**

FEATURES	ESSENTIAL / MINIMUM REQUIREMENTS		
	Pressure/ Draft Switches/ DP Switches	Temperature switches	Level switches
Sensing Element	Piston actuated for high pressure and diaphragm or bellows for low pr./ vacuum	Vapor pressure sensing, liquid filled bellow type with SS bulb and capillary (5 m minimum, to suit application)	Capacitance types, float type, conductivity type, RF type, Ultrasonic type as per suitability to the application. .
Material	316 SS	Bulb 316 SS/ capillary 304 SS	316 SS
End connection	½ inch NPT (F)	½ inch NPT (F)	Manufacturer standard
Over range/ proof pressure	150% of maximum operating pr.	-	150% of maximum operating pr.
Repeatability	+/- 0.5% of full range		
No. of contacts	2 No.+2NC. SPDT snap action dry contact		
Rating of contacts	60 V DC, 6 VA (or more if required by DDCMIS)		
Elect. Connection	Plug in socket.		
Set point adjustment	Provided over full range.		
Dead band adjustment	Adjustable/ fixed as per requirement of application.		
Enclosure	Weather and dust proof as per IP-55, metallic housing.		
Accessories	Siphon, snubber, chemical seal, pulsation dampeners as required by process	Thermo well of 316 SS and packing glands	All mounting accessories
Mounting	Suitable for enclosure/ rack mounting or direct mounting	Suitable for rack mounting or direct mounting	-

Power Supply (wherever required)	As per Contractor's Standard practice.

Notes :-

1) Where the process fluids are corrosive, viscous, solid bearing or slurry type, diaphragm seals shall be provided. Parts below the diaphragm shall be removable for cleaning. The entire volume above the diaphragm shall be completely filled with an inert liquid suitable for the application.

2) Pressure/ Diff pressure switches for very low press/ DP measurements can have sensor material other than SS316 in case of any technical limitation and the offered product is standard product of the manufacture for very low pressure applications.

3) Repeatability can be upto +/-1% of full range in case of switches with diaphragm seals or very low pressure/DP range.

4) The specifications of switches for air conditioning & ventilation system / process can be as per system manufacturer's standards. The manufacturer shall submit the adequate supporting documents for establishing their standard practice.

6.00.00 **SOLENOID VALVES**

Solenoid valves shall fulfill the following requirements: -

a) Type 2/3/4 way SS 316/ forged brass (depending on the application subject to Employer's approval during detailed engg.)

b) Power supply 24V DC.

c) Plug in connector connection.

d) Insulation : Class "H"

7.00.00 **Limit switches**

e) Limit switches shall be silver plated with high conductivity and non-corrosive type. Contact rating shall be sufficient to meet the requirement of Fire alarm Control System subject to a minimum of 60V, 6VA rating. Protection class shall be IP-55.

10.04.00	**pH Analyser**		
	a)	**Type**	: Cell - flow through
	b)	**Accuracy**	: < ± 1% of reading
	c)	**Range**	: 0 - 14 pH freely programmable (For others)
	d)	**No. of steams**	: Single
	e)	**Temp. compensation**	: Automatic

CLAUSE NO.	TECHNICAL REQUIREMENTS
1.00.00	**GENERAL:**
1.01.00	Actuators shall be designed for valve operation to ensure proper function in accordance with specifications given below and complying to EN15714-2 or equivalent. All standards, specifications and codes of practice referred to herein shall be the latest editions including all applicable official amendments and revisions.
1.02.00	This sub-section of specification is applicable for following types of electric actuators:
1.02.01	**Modulating duty electric actuators:** These shall be provided as per standard practice of OEM of equipment, meeting other requirements of specifications. For specifications of Blade pitch actuators, refer clause no. 5.00.00 of this chapter.
1.02.02	**Electric actuators for valves/ dampers/ gates (other than covered in 1.02.01):** These actuators shall be Non-Intrusive type electric actuators. The interface of these actuators with DDCMIS shall be of two types viz. with Hardwired interface and with Fieldbus interface. The common requirements of both these type of actuators are specified at clause 2.00.00, specific requirements of Non-Intrusive hardwired actuators are specified at clause 3.00.00 and specific requirements of Non-Intrusive fieldbus actuators are specified at clause 4.00.00. The applications where these two types of actuators are to be provided is specified in Part-A of Technical Specifications.
2.00.00	**COMMON REQUIREMENTS FOR NON INTRUSIVE ELECTRIC ACTUATORS**
2.01.00	**TYPE:**
2.01.01	The actuators shall have integral starters with built in SPP (Single Phasing Preventer). 415 V, 3 phase 3 wire power supply shall be given to the actuator from switch board as applicable through a switch fuse unit. Control voltage of the motor starter shall be 110 V AC / 24 V DC, derived suitably from 415V power supply.
2.01.02	The actuators shall be Non- Intrusive electric actuator. All actuator settings including torque, limit shall be possible without opening the actuator cover and LCD indication shall be available integral to actuator body.
2.02.00	**RATING:** (a) Supply Voltage & frequency: 415V +/- 10%, 3 Phase, 3 Wire & 50HZ +/-5%. (b) Sizing: Open/Close at rated speed against designed differential pressure at 90% of rated voltage. For ON/OFF type: Three successive open-close operations or 15 minutes, whichever is higher. For inching type: 150 starts per hour or required cycles, whichever is higher.
2.03.00	**CONSTRUCTION:** (a) Enclosure: Totally enclosed weatherproof, minimum IP-68 degree of protection. (b) Manual Wheel: Shall disengage automatically during motor operation.

CLAUSE NO.	TECHNICAL REQUIREMENTS

2.04.00 MOTOR:

(a) Type :

Squirrel cage induction motor suitable for Direct On Line (DOL)starting.

(b) Enclosure:

Totally enclosed, self-ventilated.

(c) Insulation

Class F. Temperature rise 70 Deg C. over 50 Deg C ambient.

(d) Bearings:

Double shielded, grease lubricated antifriction.

(e) Earth Terminals:

Two

(f) Protection:

Single Phasing Protection, Over heating protection through Thermostat (as applicable) and wrong phase sequence protection shall be provided over and above other protection features standard to bidder's design. Suitable means shall be provided to diagnose the type of fault locally.

2.05.00 POSITION/TORQUE TRANSMITTER:

The Position/ Limit measurement shall be done using absolute encoders which will give information of position/ limit in both the directions. Electronic measurement of torque shall be provided.

2.06.00 LOCAL OPERATION:

It shall be possible to operate the actuator locally also. Lockable local/remote selection shall be provided on the actuator.

2.07.00 LCD DISPLAY:

A local LCD display shall be provided to give information regarding actuator alarms, status and valve position indications as a minimum in local.

2.08.00 WIRING:

Suitable voltage grade copper wire.

2.09.00 TERMINAL BLOCK:

For power cables, the grade of TBs shall be minimum 650V.

2.10.00 ACCESSORIES:

All required accessories (if applicable) for calibration / settings/ configuration of various parameters of actuator shall be provided. For quantities, please refer Part A of technical specifications.

CLAUSE NO.	TECHNICAL REQUIREMENTS

2.11.00 **SIL CERTIFICATION:**
All actuators shall be certified for SIL 2 or better.

3.00.00 **SPECIFIC REQUREMENTS FOR NON INTRUSIVE HARDWIRED ACTUATORS**

3.01.00 **INTERFACES:**

For ON-OFF and INCHING type actuators interface with the control system shall be through hardwired signal only.

(a) Open/Close command, open/ close status and disturbance monitoring signal (common contact for Overload, Thermostat, control supply failure, L/R selector switch at local & other protections operated) shall be provided hardwired.

(b) The actuator shall be able to accept open/close command at 24V DC with max. 2.5VA load from control system. Accordingly suitable isolated interface in the actuator shall be provided.

(c) Open/close command termination logic shall be suitably built inside actuator.

(d) For typical wiring diagram Refer Tender Drawing No. 0000-999-POI-A-063 (Except plug & socket connector, if not applicable)

3.02.00 **TERMINAL BOX:**

Suitable terminals/ connectors, integral to actuator, for terminating instrumentation & power cables shall be provided. Necessary glands for power cables and instrumentation cables shall be provided.

4.00.00 **SPECIFIC REQUIREMENTS FOR NON INTRUSIVE FIELDBUS ACTUATORS**

4.01.00 **INTERFACES:**

For ON-OFF and INCHING type actuators interface with the control system shall be through fieldbus network.

(a) Open/ close commands, open/ close feedback status, disturbance signal etc. shall be available to the Control System through the fieldbus network along with diagnostics. The detailed diagnostics including the actuator operating data shall be available to the DDCMIS through the fieldbus network.

(b) All actuators shall be Foundation Fieldbus/ Profibus compatible. However the exact protocol shall be based on finalized protocol of DDCMIS. If Profibus DP protocol is envisaged then actuator shall have two (redundant) Profibus DP ports for connecting the redundant Profibus DP cables. That is if one profibus cable is cut or not working/ not available, then complete actuator functionality shall be available through the second redundant cable without any manual intervention.

(c) Open/close command termination logic shall be suitably built inside actuator.

4.02.00	**TERMINAL BOX:** Suitable terminals/ connectors, integral to actuator, for terminating fieldbus cables and power cables shall be provided. Necessary glands for power cables and armored fieldbus cables shall be provided.

CONTROL VALVES, ACTUATORS & ACCESSORIES

1.00.00 CONTROL VALVES & ACCESSORIES

1.01.00 General Requirements

1.01.01 The control valves and accessories equipment furnished by the Bidder shall be designed, constructed and tested in accordance with the latest applicable requirements of code for pressure piping ANSI B 31.1, the ASME Boiler & pressure vessel code, Indian Boiler Regulation (IBR), ISA, and other standards specified elsewhere as well as in accordance with all applicable requirements of the "Federal Occupational Safety and Health Standards, USA" or acceptable equal standards. All the Control Valves, their actuators and accessories to be furnished under this Sub-section will be fully suitable and compatible with the modulating loops covered under the Specification.

1.01.02 All the control valves and accessories offered by the Bidder, shall be from reputed, experienced manufacturers of specified type and range of valves.

1.02.00 CONTROL VALVE SIZING & CONSTRUCTION

1.02.01 The design of all valve bodies shall meet the specification requirements and shall conform to the requirements of ANSI (USA) for dimensions, material thickness and material specification for their respective pressure classes.

1.02.02 The valve sizing shall be suitable for obtaining maximum flow conditions with valve opening at approximately 80% of total valve stem travel and minimum flow conditions with valve stem travel not less than 10% of total valve stem travel. All the valves shall be capable of handling at least 120% of the required maximum flow. Further, the valve stem travel range from minimum flow condition to maximum flow condition shall not be less than 50% of the total valve stem travel. The sizing shall be in accordance with the latest edition of ISA handbook on control valves. While deciding the size of valves, Bidder shall ensure that valves trim exit outlet velocity as defined in ISA handbook does not exceed 8 m/sec for liquid services, 150 m/sec. for steam services and 50% of sonic velocity for flashing services. Bidder shall furnish the sizing calculations clearly indicating the outlet velocity achieved with the valve size selected by him as well as noise calculations, which will be subject to Employer's approval during detailed engineering.

1.02.03 Control valves for steam and water applications shall be designed to prevent cavitation, wire drawing, flashing on the downstream side of valve and down stream piping. Thus for cavitation/flashing service, only valve with anti cavitation trim shall be provided. Detailed calculations to establish whether cavitation will occur or not for any given application shall be furnished.

1.02.04 Control valves shall have leakage rate as per leakage Class-IV.

CLAUSE NO.	TECHNICAL REQUIREMENTS
1.02.05	The control valve induced noise shall be limited to 85 dBA at 1 meter from the valve surface under actual operating conditions. The noise abatement shall be achieved by valve body and trim design and not by use of silencers.
2.00.00	**VALVE CONSTRUCTION**
2.01.00	All valves shall be of globe /Butterfly body design & straightaway pattern with single or double port, unless other wise specified or recommended by the manufacturer to be of angle body type. Rotary valve may alternatively be offered when pressure and pressure drops permit.
2.02.00	Valves with high lift cage guided plugs & quick-change trims shall be supplied.
2.03.00	Cast Iron valves are not acceptable.
2.04.00	Bonnet joints for all control valves shall be of the flanged and bolted type or other construction acceptable to the Employer. Bonnet joints of the internal threaded or union type will not be acceptable.
2.05.00	Plug shall be of one-piece construction cast, forged or machined from solid bar stock. Plug shall be screwed and pinned to valve stems or shall be integral with the valve stems.
2.06.00	All valves connected to vacuum on down stream side shall be provided with packing suitable for vacuum applications (e.g. double vee type chevron packing)
2.07.00	Valve characteristic shall match with the process characteristics.
2.08.00	Extension bonnets shall be provided when the maximum temperature of flowing fluid is greater than 280 deg. C.
2.09.00	Flanged valves shall be rated at no less then ANSI press class of 300 lbs.
3.00.00	**VALVE MATERIALS**
	Refer mechanical sections for body and trim materials. The exact body and trim materials shall be finalised during detailed engineering depending on the service applications.
	However, Bidder may offer valves with body and trim materials better than specified materials and in such cases Bidder shall furnish the comparison of properties including cavitation resistance, hardness, tensile strength, strain energy, corrosion resistance and erosion resistance etc. of the offered material vis-a-vis the specified material for Employer's consideration and approval.

4.00.00 END PREPARATION

Valve body ends shall be either butt welded/socket welded, flanged (Rubber lined for condensate service) or screwed as finalised during detailed engineering and as per Employer's approval. The welded ends wherever required shall be butt welded type as per ANSI B 16.25 for control valves of sizes 65 mm and above. For valves size 50 mm and below welded ends shall be socket welded as per ANSI B 16.11. Flanged ends wherever required shall be of ANSI pressure-temperature class equal to or greater than that of the control valve body.

5.00.00 VALVE ACTUATORS

All Control Valves shall be furnished with Pneumatic Actuators. The Bidder shall be responsible for proper selection and sizing of valve actuators in accordance with the pressure drop and maximum shut off pressure and leakage class requirements. The valve actuators shall be capable of operating at 60 deg.C continuously.

Valve actuators and stems shall be adequate to handle the unbalanced forces occurring under the specified flow conditions or the maximum differential pressure specified. An adequate allowance for stem force, at least 0.15 Kg/sq.cm. per linear millimeter of seating surface, shall be provided in the selection of the actuator to ensure tight seating unless otherwise specified.

The travel time of the pneumatic actuators shall not exceed 10 seconds.

6.00.00 CONTROL VALVE ACCESSORY DEVICES

6.01.00 All pneumatic**ally** actuated control valve accessories such as air locks, hand wheels/hand-jacks, limit switches, Microprocessor based Positioner, diffusers, external volume chambers, position transmitters (capacitance or resistance type only), reversible pilot for Positioner, tubing and air sets, solenoid valves and junction boxes etc. shall be provided as per the requirements.

7.00.00 SPECIFICATIONS FOR MICROPROCESSOR BASED POSITIONERS

1	Electrical	a) Input signal	4-20 mA
		b) Power Supply	Loop powered from the output card of control system.
		c) Hart Protocol	Compatibility for remote calibration & diagnostics (Super-imposed Hart signal on input signal (4-20 mA)
		d) Valve position sensing	Non contact type position sensing **with** 4-20 mA output signal

2	Environment	a) Operating Temp	(-)30 To 80 Deg. C
		b) Humidity	0-95 %
		c) Protection Class	IP-65 Minimum
4	Test reports/ certificates	Factory Valve Signature Tests reports (Pr vs Valve travel and Travel vs I/P signal) are to be provided.	
		Test certificates as per Manufacture Standard/Relevant Standard are To Be Submitted	
5	Configuration/ calibration	Remote calibration, Auto & Manual calibration shall be possible. Universal HART Calibrator to be provided.	
6	Operating	Operating Range	Full range & split range signal.
7	Modes	Valve Action	Direct & Reverse valve action(selectable)
		Flow Characterization	Possible to fit valve characteristic curve - Linear & Equal Percentage.
8.	Fail Safe/Fail Freeze	Fail safe/Fail freeze feature is to be provided. (In case, the fail freeze feature is not intrinsic to the positioner, Bidder shall achieve the same externally through solenoid valve connected in the pneumatic circuit).	
9	Pneumatic	Air capacity	Sufficient to handle the valves selected/ boosters to be supplied if required.
		Air supply pressure	To suit air supply pressure/quality available.
		Process connection	1/4 inch NPT
10	Electrical Cable Entry	1/2-NPT, side or bottom entry to avoid water ingress.	
11	Performance	Characteristic Deviation	<=0.5 % Of Span

		Ambient Temp Effect	<=0.01 %/Deg C Or Better
12	EMC & CE Compliance	Required To International Standard Like EN/IEC.	En50081-2& En50082 Or Equivalent
13	Accessories	In-built operator panel	Display with push buttons for configuration and display on the Positioner itself (password protected/hardware lock).
		Press gauge block	For supply & output pressure.
		Mounting assembly	On as required basis.

8.00.00 TEST AND EXAMINATION

All valves shall be tested in accordance with the quality assurance programme agreed between the Employer and Contractor, which shall meet the requirements of IBR and other applicable codes mentioned elsewhere in the specifications. The tests shall include but not be limited to the following:

8.01.00 Non Destructive Test as per ANSI B-16.34.

8.02.00 Hydrostatic shell test in accordance with ANSI B 16.34 prior to seat leakage test.

8.03.00 Valve closure test and seat leakage test in accordance with ANSI-B 16.34 and as per the leakage class indicated above.

8.04.00 Functional Test: The fully assembled valves including actuators control devices and accessories shall be functionally tested to demonstrate times from open to close position.

8.05.00 **CV Test**: Refer **Cl.no 3.00.00 (8) Subsection IIIC-06 (Type test requirements)**

9.00.00 CONTROL VALVE QUANTITIES

Bidder shall furnish all the control valves under this package as finalised during detailed engineering stage without any price repercussions whatsoever depending on the process requirements. All the control valves provided by the Bidder for this project shall meet the specifications requirements specified herein. Specification for control valves in this Sub-section has to be read in conjunction with other relevant Sub-sections of this specification.

CLAUSE NO.	TECHNICAL REQUIREMENTS
1.00.00	**CONTROL DESK & PANELS**
1.01.00	**GENERAL**
1.01.01	All control desk, panels, LVS panel etc. shall be furnished fully wired with necessary provision for convenience outlets, internal lighting, grounding, ventilation, space heating, anti-vibration pads, internal piping & accessories as required for completeness of the system.
1.01.02	All panels, desks, cabinets shall be free standing type & have bottom / top entry for cables to be finalised application wise during detailed engineering stage. The bottom of desk & cabinets shall be sealed with bottom plate, compression cable glands (double for field and single for inside rooms) and fire proof sealing material to prevent ingress of dust and propagation of fire. Sufficient number of power receptacles with disconnect switches shall be installed within all panels/desk.
1.01.03	Exterior steel surface shall be sand blasted, ground smooth, filled, primed, sanded and smooth enamel painted to give a good finish subject to minimum paint thickness of 65-75 microns for sheet thickness of 3 mm and 50 microns for sheet thickness of 2mm. The exact color shall be finalised during detailed engineering.
1.01.04	The design shall conform to the EN ISO 11064 (Ergonomical design of control room), Part-1,2 and 3.
2.00.00	**CONTROL DESK & PANEL**
2.01.00	**GENERAL**
2.01.01	The exact dimensions, material, construction details, grounding, general arrangement etc. of Control Desk etc. shall be as per the actual requirement and shall be finalised during detailed engineering and subjected to Employer's Approval.
2.01.02	For control desk mounted instruments/ devices etc., which are to be powered from UPS, all required conversion of interface equipments / accessories to make such devices compatible with UPS supply shall be provided. All necessary hardware like Input switches/ fuse unit for each feeder as well as switch fuse unit for each instrument/ device on the power supply line shall be provided. From UPS, redundant feeders shall be provided with suitably rated MCB and provision of fast auto changeover of UPS feeders.
2.02.00	**Control Desk (CD)**
2.02.01	Control desk shall be Modular, non-welded construction free standing table top type with front & back cover constructed of 1.6 mm thick CRCA steel plates. The tabletop of the control desk shall be arc-shaped for mounting TFT monitors & mice. The work surface of control desk shall be 30mm thick with the top 12mm of Acrylic Solid Surface (ASS) and the remaining 18mm of laminated medium density fiber board. Work surface shall be made of two different colors at same level and seamlessly joined in each section. The structure frame shall consist of extruded aluminum top and bottom horizontal beams and vertical support tensioned together to form an integrated, finished curvilinear shaped frame. Vertical & Horizontal supports, minimum 2.5mm and 2mm thick respectively, have to be provided for the structure frame. Extreme side legs shall be illuminated type and should complete the

CLAUSE NO.	TECHNICAL REQUIREMENTS
	overall form and aesthetics of the desk. It shall have concealed cable & wire way management system. Telephone sets shall be mounted on the control desk. Sliding keyboard trays shall be provided on the CD. The exact profile of the desk, dimension and the radius of curvature shall be finalised during detailed engineering stage.
2.02.02	All operator monitors & mice shall be mounted on this CD.
2.02.03	The cabling / wiring between OWS & CPU's, power supply cables etc. shall be aesthetically routed and concealed from view.
2.03.00	**Internal Panel/Desk Items**
	Equipment and devices mounted within the panels/desk shall be mounted on suitable racks/brackets and shall be arranged for convenient access for adjustment and maintenance work.

	SPECIFICATION FOR LOCAL PANELS	SPECIFICATION NO.: PE-SS –999- 145 –054A	
		VOLUME II B	
		SECTION D	
		REV. NO. 03	DATE : 16-09-2013
		SHEET 1 OF 6	

1.0 SCOPE

This specification covers the Design, Manufacture, Inspection and Testing at the manufacturer's works, proper packing for transportation and delivery to site, supervision, erection, and commissioning at site of Local Panels required for control and monitoring of the Auxiliary Plant & Equipment.

2.0 CODES AND STANDARDS

2.1 All the equipments specified herein shall comply with the requirements of the latest issue of the relevant National and International standards.

2.2 As a minimum requirement, the following standards shall be complied with:

a) IS-6005 : 1998 : Code of practice for phosphating of iron and steel.
b) IS-5 : 2007 : Colors for ready mixed paints and enamels.
c) IS-1248:2003 : Direct Acting Indicating Analog Elec Measuring Instruments.
d) IS/IEC 60947:Part 1:2004 : Low Voltage switchgear & control gear: Part-I (General Rules)
e) IS-8828:1996 : Circuit breaker for household and similar installations.
f) IS-13947 (Part-I):1993 : Low Voltage switchgear & control gear : Part-I (General Rules)
g) ISA-18.1:1979 : Annunciator Sequences and Specification
h) NFPA-496:2003 : Purged & Pressurised Enclosure for Electrical Equipment in Hazardous Locations.

3.0 TECHNICAL REQUIREMENTS

3.1 Panel Construction

3.1.1 The local panels shall house the secondary instruments, annunciation system, Single loop controller, Control switches / push buttons, indicating lamps/LED cluster, relays, timers and other devices required for operation and monitoring of the equipment locally.

3.1.2 The panels shall be of free standing type either welded construction on angle iron (minimum section of 50 x 50 x 4 mm) structure or folded construction by sheet metal formation depending upon the equipments to be mounted on it. The panels shall be robustly built and stiffeners as necessary shall be provided.

3.1.3 The panel shall be suitably reinforced to ensure adequate support for all instruments mounted thereon. All welds on exposed panel surfaces shall be ground smooth.

3.1.4 The salient features of construction shall be:

Sheet material: Cold rolled sheet steel
Frame thickness: Not less than 3.0mm
Enclosure thickness: Not less than 2.5 mm for load bearing sections (Mounted with instruments)
1.6 mm for doors and Not less than 2.0 mm for others
Panel Height: Not less than 2365 mm (Refer data sheet-A (No. PES-145A-DS1-0)
Gland plate thickness: 3.0mm
Base channel: ISMC 100 with anti-vibration mounting & foundation bolts.

3.1.5 The panel shall be provided with rear doors with integral lockable handle. The door when locked shall be held at minimum three places. The door width shall not be more than 550mm.The doors shall be provided with suitable stiffeners to prevent buckling. The handle shall be on the right side of the door. The door shall be removable type with concealed hinges to facilitate maintenance work. Suitable pocket inside the door shall be provided for keeping the drawings / documents. Double door shall be provided with suitable glass windows, as per the requirement.

3.1.6 Suitable neoprene gasket shall be provided on all doors and removable covers. Suitable ventilation system along with louvers shall be provided at bottom and top of the doors covered with removable wire mesh.

3.1.7 The class of protection shall be in accordance with IP-42 unless otherwise specified in the data sheet – A (No. PES-145-54A-DS1-0).

3.1.8 All steel surfaces shall be cleaned by sand / pellet blasting, treated for pickling, degreasing and phosphating etc. by seven tank method. The panel shall have a high quality finish and appearance. The panel shall be painted with two coats of primer followed by two coats of epoxy / synthetic enamel based final paint of color shade and finish as given in data sheet-A (No. PES-145A-DS1-0). Minimum thickness of the paint shall be 85 microns for external paint and 70 microns for internal paint.

3.1.9 The cable glands of the required size and type as given in data sheet-A (No. PES-145A-DS1-0) shall be supplied alongwith the Panel.

3.1.10 All operable and indicating devices shall be mounted on the front of the panel while aux. Relays / timers MCBs etc. required for realization of control logics shall be mounted on a mounting plate inside the panel. Auxiliary relays and timers etc. shall be grouped according to the control function.
No operable or indicating devices shall be mounted below 750 mm and above 1800 mm (w.r.t. finished ground level). The devices shall be located in such a way so as to ensure easy access for operation / maintenance.

3.1.11 Single / dual control power supply feeders of voltage class as specified in data sheet-A (No. PES-145A-DS1-0) shall be provided by the purchaser. In case redundant power supply feeders are provided then auto changeover unit shall be mounted on the panel are in the panel supplier's scope. Where DC control power supply is specified an additional 240V, 50 Hz AC supply feeder for powering of space heater and lighting shall be provided by the purchaser. Suitable arrangement shall be provided inside the panel to receive and terminate the power supply feeder(s). For this purpose MCBs of suitable current rating shall be provided by the vendor. A supervisory relay along with a pilot lamp to indicate control supply 'ON' shall be provided on the panel. Any other power supply required for the operation of the devices mounted in the panel shall be arranged by the vendor.

3.1.12 The internal wiring shall be carried out with 1100 volt grade PVC insulated copper multi strand wire / flexible of 1.5mm2 size. AC & DC wires shall be kept separate from each other. Separate coloured wires to be used for AC and DC circuits. All wires shall be properly numbered and identified with ferrules as per the Control scheme / wiring diagram. Wires shall be routed and run through PVC troughs.

3.1.13 Terminal blocks shall be clip on type, 1100 volts grade. Separate terminal blocks shall be used for AC & DC circuits. The terminals shall be suitable for terminating 0.5 mm2 to 2.5mm2 external cables. The TB points in terminal block shall be cage clamp type / screw type. The terminal for ammeters shall be provided with removable links for shorting CTs. Each terminal strip shall be provided with identification strip. The terminal shall not be mounted below 250 mm height from finished floor. The panel shall have ten (20) percent spare terminal.

3.1.14 The interior of each panel shall be suitably illuminated through fluorescent lamps / tube lights with shrouded cover of minimum 15W operable on 240V 50 Hz AC power supply through panel door switch. A 15 Amp. 3-pin Power receptacle shall be provided.

3.1.15 Suitable space heaters operable on 240 Volts 50 Hz AC power system shall be provided at the panel bottom. These shall be designed to maintain the panel temperature five (5) deg. C above the ambient temperature during maintenance shutdown. Suitable isolating and control devices comprising of MCB, thermostat etc. shall be provided for the space heater.

3.1.16 The panel shall be provided with a copper earth bus of 25 x 6 mm size running throughout the width of the panel. It shall be terminated internally with 10 mm bolts at extreme ends for connection to; main station earth. The panel mounted equipments / devices shall be connected to earth bus through green coloured PVC insulated stranded copper conductor of 2.5 mm2 size.

3.1.17 Local Panel shall be provided with main name plate of 150 mm x 40 mm size having inscription of 20 mm height. The individual devices on the panels shall be as provided with separate name plate with inscription of 3 mm height. The instrument / devices shall be provided with stick on label plates inside the panel. The material of the main and individual labels shall be three (3) ply 3 mm thick Traffolyte

Sheet / 2 mm Anodised Aluminium Plate. The inscription shall be with white letters on black background on traffolyte sheet. The labels shall be fixed by self tapping non-rusting screws.

3.1.18 Vendor shall furnish electric load and heat load list (in case panel is to be placed in ac environment) of each panel.

3.2 Hazardous Area Panel Requirement

3.2.1 The Local Panel located in hazardous area shall be pressurized as per NFPA-496 requirements to render it non-hazardous. Alarms shall be provided for local and remote annunciation when pressurisation falls below 2.5 mm of water column. Protection shall be of type Z of NFPA-496. It shall not be possible to switch ON the power of purged section unless it is purged as per the recommendation of NFPA-496. Vendor must provide a protective device on the panel to protect the panel from over pressurisation.

3.2.2 Vendor shall supply pressurisation kit consisting of valves, restriction orifices, dual filter regulation, pressure gauges, pressure switches, rotameter etc. Pressurisation kit shall be surface mounting on a metal board and located outside the local panel. Pressurisation kit shall further consist of solenoid valve flow switch, timer blow off safety device etc., so as to make purging fully automatic. However final start shall be manual. Panel protection against over pressure to be provided as per NFPA-496.

3.2.3 Pressurised local control panel pressurization kit assembly design shall provide minimum leakage flow through the Local Control Panel. Panel venting shall be as per NFPA-496.

3.2.4 All components in the local panel like indicating instruments, push buttons switches, lamps etc., which are required to be energized without panel pressurization or before completion of purge cycle shall be explosion proof as per NEMA-7 & suitable for area classification.

3.2.5 All push buttons etc. requiring frequent operation during machine running shall have good positive sealing. Weatherproof housing or cover to be provided wherever necessary. Vendor shall provide pressurisation bypass switch outside explosion proof enclosure of pressurized panel with lamp indication. This shall be used only during maintenance. All hinges, screws, other non-painted metallic parts shall be of stainless steel material.

3.2.6 Provision to switch off manually all types of power shall be provided in the panel. In addition, it shall also be possible to switch off power circuits / components which are powered from motor control centre or control room manually in case of pressurization failure. All such cables from MCC and main control room shall be terminated in explosion proof boxes (NEMA-7).

3.3 Control & Monitoring devices

3.3.1 Instruments like Indicators, recorders, single loop controllers etc. as applicable and specified elsewhere for the plant / equipment shall be supplied and mounted on the panel.

3.3.2 Alarm Annunciator System

It shall be solid state discrete facia type having a sequence of ISA-S18.1A or as specified, opaque facia windows of 70 mm x 50 mm size, having two (2) lamps per window, and hooter of 10W, and provision for repeat group alarm at remote. The annunciator shall be provided with ten (10) percent spare windows or minimum two (2) windows along with electronics.

3.3.3 Relays

The relays shall be electromagnetic type suitable for specified control supply. Its contact configuration and rating shall be suitable for the specified control function. However minimum contact rating shall be 5 Amp AC & 2 Amp DC as applicable. There shall be ten (10) percent spare contacts.

3.3.4 Timers

The timers shall be electronic type suitable for specified control supply. Its contact configuration and rating shall be suitable for the specified control function. However, minimum contact rating shall be 5 Amp AC & 2 Amp DC as applicable.

3.3.5 Control / Selector Switches

Switches shall be Rotary Cam type with minimum of 5 Amps AC & 2 Amp DC continuous current rating. Selector switches shall be stay put type while control switches shall be spring-return-to-neutral type. Contact configuration and rating shall be as per the control function requirement. The switches shall be lockable type wherever specified. Each switch shall be provided with engraved plates indicating the switch position / functions.

3.3.6 Push Buttons / Indicating Lights

The push buttons shall be momentary action self-resetting type, however stop P.B. for unidirectional drives shall be provided with manual reset facility. Its contact configuration & rating shall be as required for the control function but minimum 2 NO + 2 NC of 5 Amp. AC rating. It shall have round coloured projecting tab and engraved escutcheon plate / inscription plate. Colour coding of push buttons shall be as under:

RED	Motor OFF / Valve CLOSE	YELLOW	Alarm acknowledge	Left Hand Side
GREEN	Motor ON / Valve OPEN	BLACK	Lamp test	Right Hand Side

Indicating lights shall be suitable for direct connections across specified power supplies. It shall be fitted with built in resistance to prevent circuit tripping on shorting of lamp filament. It shall be fitted with LED cluster type lamp replaceable from front.

GREEN	Motor OFF / Valve CLOSED condition	AMBER	Motor tripped	Left Hand Side
RED	Motor ON / Valve OPEN condition	WHITE	Normal / healthy	Right Hand Side

3.3.7 Ammeters

Ammeter shall be 96 x 96 mm size, 90 deg. deflection, 1.5% accuracy, 1 Amp. CT operated or with 4-20mA input and Flush mounting type as called for in the data sheet-A (No. PES-145-54A-DS1-0). Ammeters for motors shall have six (6) times folded scale at upper end to enable motor starting current indication

3.3.8 Miniature Circuit Breaker (MCB)

These shall be instantaneous magnetic trip type for short circuit in addition to current time inverse delayed thermal trip feature for over current protection. The housing of MCB shall be made of non-ignitable, high impact material. It shall have minimum short circuit rating of 9 KA for AC Voltages and 4 KA for DC Voltages.

3.3.9 Makes of various instruments / devices shall be as given below

1.	Alarm Annunciators	:	Procon / IIC
2.	Ammeters	:	AEP / IMP
3.	Control / Selector Switches	:	Alsthom / Kaycee / Siemens / L&T
4.	Push Buttons / Indicating Lamps	:	Siemens / L&T / Teknic / Alsthom
5.	Auxiliary Relays	:	Jyoti / Siemens / L&T / OEN
6.	Timers	:	L&T / Alsthom / Bhartiya Cutler Hammer
7.	MCBs	:	S&S Power Engg. / Indo Asian / MDS
8.	Terminal Blocks	:	Jyoti / Elmex

4.0 TESTING AND INSPECTION

4.1 The bidder shall adopt suitable quality assurance program to ensure that the equipments offered will meet the specification requirements in full.

4.2 BHEL's standard Quality Plan for LCP is enclosed with the specification. The bidder shall furnish his acceptance to BHEL's QP and submit the signed and stamped copy of QP along with the offer.

4.3 The vendor shall conduct the following tests as a minimum requirement:

4.3.1 Routine Tests

1. High Voltage (H.V.)
2. Insulation Resistance (I.R.)
3. Functional

4.3.2 Type Tests

1. Enclosure Class Test

5.0 SPARES AND CONSUMABLES

5.1 Commissioning Spares and consumables

The bidder shall supply all commissioning spares and consumables 'as required' during Start-up, as part of the main equipment supply.

5.2. Mandatory Spares

The bidder shall offer alongwith main offer, the Mandatory Spares as specified elsewhere in the specification. The Mandatory Spares offered shall be of the same make and type as the main equipment.

5.3. Recommended Spares

The bidder shall furnish a list of Recommended Spares indicating the normal service expectancy period and frequency of replacement; quantities recommended for 3 years operation alongwith unit rate against each item to enable BHEL/BHEL's Customer to place a separate order later, if required.

6.0 DRAWINGS AND DOCUMENTS

6.1 The bidder shall furnish the following documents in required number of copies along with the bid :

1. Data Sheet no. PES-145A-DS1-0
2. General Arrangement Drawing.
3. Catalogue and technical information for instruments and devices.
4. Quality Plan.

6.2 The vendor shall furnish the following documents in required number as agreed after the award of contract:

1. Data Shee No. PES-145A-DS2-0
2. GA Drawing indicating layout of instruments, construction details, foundation details, cable gland plate alongwith cable glands and all details mentioned in this specification.
3. Control Schematic Diagram along with grouping of different terminals for various functions.
4. Catalogue and technical information for instruments and devices with selected options clearly marked.
5. O&M Manuals.
6. "As Built" Drawing.
7. CDs.

7.0 MARKING AND PACKING

7.1 Panel with all instruments / devices mounted on it shall be suitably packed & protected for the entire period of despatch, storage and erection against impact, abrasion, corrossion, incidental damage due to vermin, sunlight, high temperature, rain moisture, humidity, dust, sea-water spray (where applicable) as well as rough handling and delays in Transit and storage in open.

8.0 APPLICABLE DATA SHEET FORMS

This document shall be read with one or more of the following data sheet forms :

- Data sheet A&B for Local Panels : Data sheet no. PES-145A-DS1-0
- Data sheet C for Local Panels : Data sheet no. PES-145A-DS2-0

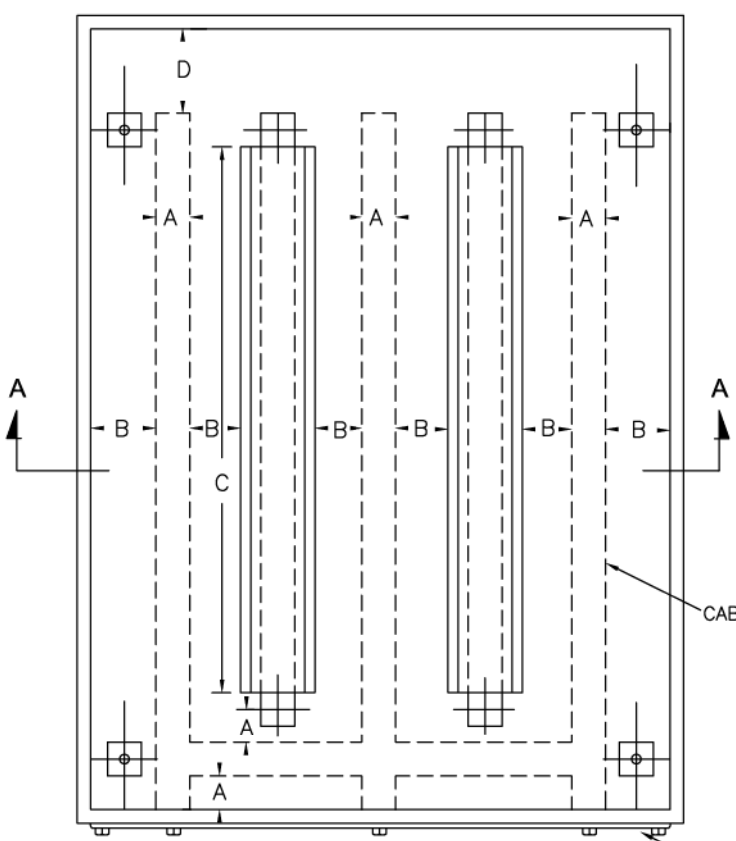

FRONT VIEW WITH COVER REMOVED

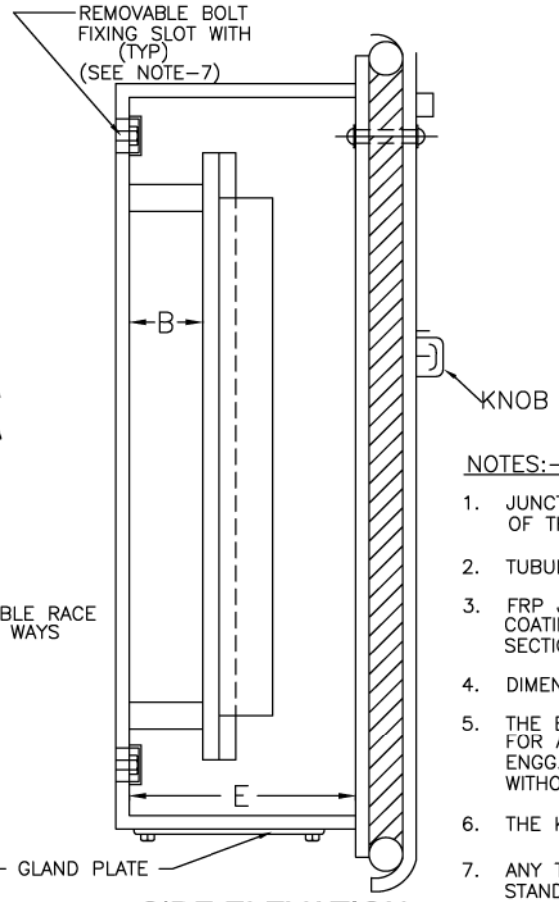

SIDE ELEVATION

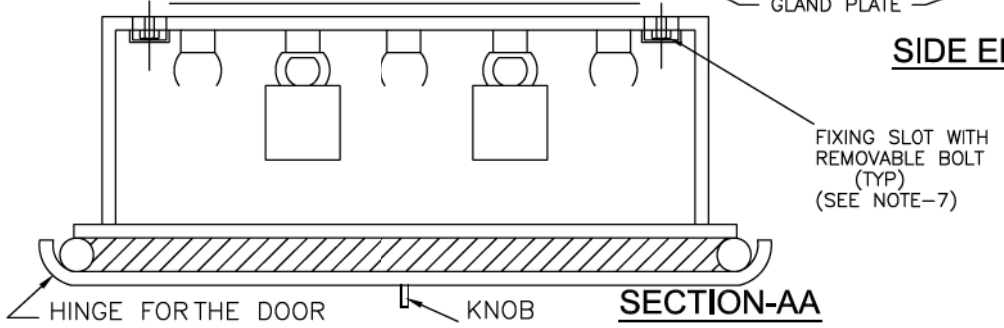

SECTION-AA

A – 75 mm
B – 25 mm
C – SEE NOTE-4
D – 100 mm
E – 150 mm

NOTES:-

1. JUNCTION BOXES SHALL HAVE GLAND PLATES AT THE BOTTOM OF THE BOX ONLY.
2. TUBULAR TYPE GASKETS WILL BE USED.
3. FRP JUNCTION BOXES, SHALL BE PROVIDED WITH POLYEUTHERENE COATING. ALSO REFER SUB SECTION INST CABLE, PART-B SECTION-VI FOR DETAILES.
4. DIMENSION OF 'C' SHALL BE BASED ON NO. OF TERMINAL BLOCKS.
5. THE EXACT TYPE & DIMENSION OF JUNCTION BOXES TO BE USED FOR A PARTICULAR APPLICATION SHALL BE AS DECIDED DURING DETAIL ENGG. STAGE AND SHALL BE SUBJECT TO EMPLOYER's APPROVAL WITHOUT ANY PRICE REPERCUSSION.
6. THE KNOB FOR ALL THE JUNCTION BOXES SHALL BE IDENTICAL.
7. ANY TYPE OF SEALED FIXING ARRANGEMENT AS PER MANUFACTURER's STANDARD CAN ALSO BE PROVIDED SUBJECT TO EMPLOYER's APPROVAL.

FOR TENDER PURPOSE ONLY

एन टी पी सी NTPC

N T P C LIMITED
(A GOVERNMENT OF INDIA ENTERPRISE)
ENGINEERING DIVISION

REV.NO.	DESCRIPTION	DRAWN	DESIGN	CHKD.	M	E	C	C&I	ARCH.	APPD	DATE
D	GENERALLY REVISED		JM	KS							21.08.12
C	GENERALLY REVISED		JM	KS							04.08.06
B	GENERALLY REVISED	S.K.	A.R	PS							
A	FIRST ISSUE	S.K.	A.R	PS							04.05.05

CLEARED BY

PROJECT: TYPICAL THERMAL POWER PLANT

TITLE: G.A. OF JUNCTION BOX

SIZE	SCALE	DRG. NO.	REV. NO.
A4	N.T.S.	0000-999-POI-A-017	D

This document is the property of NATIONAL THERMAL POWER CORPORATION LTD.
No part of this document will be reproduced by any means without the written permission.

This drawing and the design it covers are the property of NTPC LTD. and must not be copied, loaned or exhibited either in part or in whole without written permission. Any contravention is liable for prosecution.

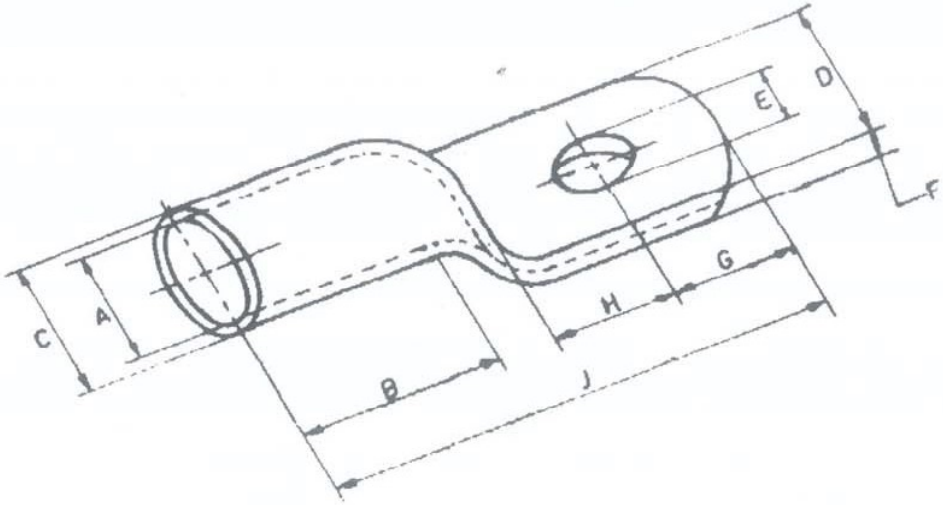

S.No.	Conductor Size HT Power Cables	E (Dimensions in mm)
1	95 sq.mm	13
2	150 sq.mm	17
3	300 sq.mm	17

REV. NO.	DESCRIPTION	DRAWN	DESIGN	CHKD	M	E	C	C&I	ARCH	APPD	DATE
RA	FOR TENDER PURPOSE	VC	VC		-		-	-	-		

CLEARED BY

एन टी पी सी NTPC

NTPC LTD.
(A GOVERNMENT OF INDIA ENTERPRISE)
ENGINEERING DIVISION

PROJECT: STANDARD

TITLE: TYPICAL DRAWING FOR CABLE LUG

SIZE	SCALE	DRG. NO.	REV. NO.
A4	NTS	0000-211-POE-A-051	RA

	C&I SPECIFICATION FOR LIME DOSING SYSTEM	SECTION: C SUB SECTION: C&I

INSTRUMENTATION CABLE, CABLE INTERCONNECTION AND TERMINATION PHILOSOPHY

CLAUSE NO.	TECHNICAL REQUIREMENTS

1.00.00 **INSTRUMENTATION CABLE, CONTROL & POWER SUPPLY CABLE, INTERNAL WIRING AND ELECTRICAL FIELD CONSTRUCTION MATERIAL (CABLE SUB-TRAYs ETC)**

1.01.00 **General requirements**

1.01.01 All cables including special cables, internal wiring and electrical field construction material shall conform to this specification, Employer approved detail engineering drawings & documents and the latest edition of the relevant standards & guidelines. The Bidder shall furnish all material and services required for the completeness of the work identified in his scope as per this specification.

1.01.02 The Contractor shall supply, erect, terminate and test all instrumentation cables for control and instrumentation equipment/devices/systems included under Contractor's scope and ensuring completeness of the control system.

1.01.03 Any other application where it is felt that instrumentation cables are required due to system/operating condition requirements, are also to be provided by Contractor.

1.01.04 Other type of cables like fiber optic/co-axial cables for system bus, cables for connection of peripherals etc. (under Contractor's scope) are also to be furnished by the Contractor.

1.01.05 Contractor shall supply all cable erection and laying hardware from the main trunk routes like branch cable trays/sub-trays, supports, flexible conduits, cable glands, lugs, pull boxes etc. on as required basis for all the systems covered under this specification.

1.01.06 Wherever the quantity has been defined as on as required basis, the same are to be furnished by contractor on as required basis within his quoted lump sum price without any further cost implication to the Employer.

2.00.00 **SPECIFICATION OF INSTRUMENTATION CABLE**

2.01.00 **Common Requirements**

S. No.	Property	Requirement
1	Operating Voltage	225 V (peak value)
2.	Codes and standard	All instrumentation cables shall comply with VDE 0815, VDE 0207, Part 4, Part 5, Part 6, VDE 0816, VDE 0472, SEN 4241475, ANSI MC 96.1, IS-8784, IS-10810 (latest editions) and their amendments read along with this specification.
3.	Continuous operation suitability	At 205 Deg C for Type-C cables & heat resistant cables, at 70 Deg C for all other type of cables.

CLAUSE NO.	TECHNICAL REQUIREMENTS

S. No.	Property	Requirement
4.	Marking :- a.*Progressive automatic on-line sequential marking of length in meters to be provided at every one meter on outer sheath.* *b.*Marking to read 'FRLS' to be provided at every 5 meters on outer sheath except for Type-C cable c.Durable marking at intervals not exceeding 625 mm shall include manufacturer's name, insulation material, conductor's size, number of pairs, voltage rating, type of cable, year of manufacturer to be provided on outer sheath.	
5.	Allowable Tolerance on overall diameter	+/- 2 mm (maximum) over the declared value in data sheet
6.	Variation in diameter	Not more than 1.0 mm throughout the length of cable.
7.	Ovality at any cross-section	Not more than 1.0 mm
8.	CAGE-CLAMP suitability	To be provided
9.	Color	The outer sheath shall be of blue color.
10.	Others	Repaired cables shall not be acceptable.

2.02.00 **Specific Requirements**

Specification Requirements	Type-A cable	Type-B cable	Type F & G cable	Type-C cable
A. CONDUCTORS				
Cross section area	0.5 sq. mm			
Conductor material	ANSI type KX	ANSI type SX	Annealed bare copper	ANSI type KX
Colour code	Yellow-Red	Black-Red	As per VDE-815	Yellow-Red
Conductor Grade	As per ANSI MC 96.1		Electrolytic	As per ANSI MC 96.1
No & dia of strands	7x0.3 mm (nom)			
No. of Pairs	2	2	2/4/8/12/16/24 / 48	2

CLAUSE NO.	TECHNICAL REQUIREMENTS

Specification Requirements	Type-A cable	Type-B cable	Type F & G cable	Type-C cable
Max. conductor loop resistance per Km (in ohm) at 20 deg. C	As per ANSI MC 96.1		73.4	As per ANSI MC 96.1
Reference Standard	As per ANSI MC 96.1		VDE : 0815	As per ANSI MC 96.1
B. INSULATION				
Material	Extruded PVC type YI 3			Teflon (i.e. extruded FEP)
Thickness in mm (Min/Max)	0.25/0.35			0.4 / 0.50 (nominal)
Volume Resistivity (Min) in ohm-cm	1 x 10^{14} at 20 deg. C & 1x10^{11} at 70 deg. C.			2.8x 10^{14} at 20 deg. C & 2x10^{11} at 205 deg. C.
C. PAIRING & TWISTING				
Max. lay of pairs (mm)	50			
Single layer of binder tape on each pair provided	Each core printed with number or Numbered binder tape to be provided on each pair		Yes	Each core printed with number or Numbered binder tape to be provided on each pair
Bunch (Unit Formation) for more than 4P	N.A		To be provided	N.A
Conductor /pair identification as per VDE0815	N.A.		To be provided	N.A.
D. SHIELDING				
Type of shielding	Al-Mylar tape			
Individual pair shielding	No		To be provided for F-type cable	No
Minimum thickness of Individual pair shielding	No		0.028mm (28 micron)	No

CLAUSE NO.	TECHNICAL REQUIREMENTS

Specification Requirements	Type-A cable	Type-B cable	Type F & G cable	Type-C cable
Overall cable assembly shielding	To be provided			
Minimum thickness of Overall cable assembly shielding	0.055 mm (55 micron)			
Coverage / Overlapping	100% / 20%			
Drain wire provided for individual shield	N.A.		Yes (for F-type) Size- 0.5 sqmm No of strands-7 Dia of strands- 0.3mm Annealed Tin coated copper	N.A.
Drain wire provided for overall shield	Yes, Size- 0.5 sqmm,No of strands-7,Dia of strands-0.3mm,Annealed Tin coated copper			
E. FILLERS (if applicable)				
Non-hygroscopic, flame retardant	To be provided			
F. OUTER SHEATH				
Material	Extruded PVC compound YM1 with FRLS properties			Teflon (i.e. extruded FRP)
Minimum Thickness at any point	1.8 mm			0.4 mm
Nominal Thickness at any point	>1.8 mm			0.5 mm
Resistant to water, fungus, termite & rodent attack	Required			
Minimum Oxygen index as per ASTMD-2863	29 %			N.A.
Minimum Temperature index as per ASTMD-2863	250 deg.C			N.A.

CLAUSE NO.	TECHNICAL REQUIREMENTS

Specification Requirements	Type-A cable	Type-B cable	Type F & G cable	Type-C cable
Maximum Acid gas generation by weight as per IEC-60754-1	20%			N.A.
Maximum Smoke Density Rating as per ASTMD-2843	60% (defined as the average area under the curve when the results of smoke density test plotted on a curve indicating light absorption vs. time as per ASTMD-2843)			N.A.
Reference standard	VDE207 Part 5,VDE-816			VDE207 Part 6 ASTM D2116
G. Electrical Parameters				
Mutual Capacitance Between Conductors At 0.8 Khz (Max.)	200 nF/km		120 nF/km for F type 100 nF/km for G-type	200 nF/km
Insulation Resistance (Min.)	100 M Ohm/Km			
Cross Talk Figure (Min.) At 0.8 Khz	60 dB		60 dB	60dB
Characteristic Impedance (Max) At 1 Khz	N.A.		320 OHM FOR F-TYPE 340 OHM FOR G-TYPE	N.A.
Attenuation Figure At 1 Khz (Max)	N.A.		1.2 db/km	N.A.
H. COMPLETE CABLE				
Complete Cable assembly	Shall pass Swedish Chimney test as per SEN-SS 4241475 class F3.			N.A.

CLAUSE NO.	TECHNICAL REQUIREMENTS

Specification Requirements	Type-A cable	Type-B cable	Type F & G cable	Type-C cable
Flammability	Shall pass flammability as per IEEE-383 read in conjunction to this specification			As per manufacturer's standard subject to employer's approval
I. CABLE DRUM				
Type	Non-returnable wooden drum (wooden drum to be constructed from seasoned wood free from defects with wood preservative applied to entire drum) or steel drum.			
Length	1000 m ± 5% for up to & including 12 pairs 500 m ± 5% for above12 pairs			

Note: Heat resistant instrumentation cable shall have same specification as of G/F type instrumentation cable as specified above, except that insulation and outer sheath material shall be Teflon and cable shall be suitable for continuous operation at 205 Deg. C

CLAUSE NO.	TECHNICAL REQUIREMENTS

3.07.00 Penetration of water resistance and impact resistance shall be as per IEC standard.

4.00.00 SPCIFICATION OF CONTROL & POWER SUPPLY CABLES

Refer Electrical sub-sections

5.00.00 INSTRUMENTATION CABLE INTERCONNECTION AND TERMINATION PHILOSOPHY

The cable interconnection philosophy to be adopted shall be such that extensive grouping of signals by large scale use of field mounted Group Junction Boxes (JBs) at strategic locations (where large concentration of signals are available, e.g. valves limit & torque switches, switchgear) is done and consequently cable with higher number of pairs are extensively used. The details of termination to be followed are mentioned in the given Table A.

TABLE A: CABLE TERMINATION TO BE FOLLOWED

Application		Type Of Termination		Type Of Cable
FROM (A)	**TO (B)**	**END A**	**END B**	
Valves/dampers drives (Integral Junction box)	Marshalling / Marshalling – cum Termination Cubicle / local group JB	Plug in connector	Post mount cage clamp type.	G
Transmitters, Process Actuated switches mounted in LIE/LIR	Integral Junction box of LIE/LIR	Plug in connector	Cage clamp (Rail mount) type.	F,G
RTD heads	Local junction box	Plug in connector	Cage clamp (Rail mount) type.	F
Thermocouple	Local junction box / CJC box (if applicable)	Plug in connector	Cage clamp (Rail mount) type.	A, B, C*
Other Field mounted Instrument	Local JB / Group JB	Plug in connector	Cage clamp (Rail mount) type.	F,G
RTD	Temperature transmitter	Plug in connector	Screwed, Cage clamp type	F
Thermocouple	Temperature transmitter	Plug in connector	Screwed, Cage clamp type	A, B, C*
Local Junction box, Temperature Transmitter, Int. Junction box of LIE/ LIR/ MCC/SWGR	Group JB	Cage clamp (Rail mount) type.	Cage clamp (Rail mount) type.	F,G

Application		Type Of Termination		Type Of Cable
FROM (A)	TO (B)	END A	END B	
Local Junction box, Temperature Transmitter, Int. Junction box of LIE/ LIR/ Group JB / MCC/SWGR	Marshalling / Marshalling – cum Termination Cubicle	Cage clamp (Rail mount) type.	Cage clamp (Post mounted) type.	F,G
Marshalling cubicle/ Termination Cabinet	Electronic system cabinet	Cage clamp (Post mounted) type.	Plug-in connector / other system as per Mfr.'s Standard	Internal wiring
Marshalling/ Termination System Cabinets	UCD mounted equipments	Cage clamp (Post mounted) type.	Plug in connector / Cage clamp type (rail mounted).	F,G (with plug-in connect or at one end)
DDCMIS/PLC cabinets	PC, Printers etc.	Plug in connector	Plug in connector	Mfr.'s Standar d

Notes

1 Normally 10% spare cores shall be provided when the numbers of pairs of cables are more than four pairs, except for pre-fabricated cables which shall be as per manufacturer's standard.

2 For analog signals, individual pair shielding & overall shielding & for Binary signals, only overall shielding of instrumentation cables shall be provided.

3 * For high temperature applications only.

4 . For connection between field/JB and DDCMIS marshalling cabinet

Minimum 4 pair instrumentation cable shall be used.

5 All the spare cores of instrumentation cable have to be terminated in Marshalling cabinets/ DCS panel end.

6 Not used.

6.00.00 TERMINAL BLOCKS

6.01.00 All terminal blocks shall be rail mounted/post mounted, cage clamp type with high quality non-flammable insulating material of melamine suitable for working temperature of 105 deg. C. The terminal blocks in field mounted junction boxes, temperature transmitters, instrument enclosures/racks, etc., shall be suitable for cage clamp connections. The terminal blocks in Control Equipment Room logic/termination/marshalling cubicles shall be suitable for post

CLAUSE NO.	TECHNICAL REQUIREMENTS
	mounted cage clamp connection at the field input end. The exact type of terminal blocks to be provided by the Bidder and the technical details of the same including width etc. shall be subject to Employer's approval.
6.02.00	All the terminal blocks shall be provided complete with all required accessories including assembly rail, locking pin and section, end brackets, partitions, small partitions, transparent covers, support brackets, distance sleeves, warning label, marking, etc.
6.03.00	The marking on terminal strips shall correspond to the terminal numbering on wiring diagrams. At least 20% spare unused terminals shall be provided everywhere including local junction boxes, instrument racks/enclosures, termination/marshalling cabinets, etc. All terminal blocks shall be numbered for identification and grouped according to the function. Engraved labels shall be provided on the terminal blocks.
6.04.00	For terminating each process actuated switches, drive actuators, control valves, Thermocouple, RTD, etc. in Local Junction Boxes, etc, refer Drg no. 0000-999-POI-A-065.
6.05.00	The terminal blocks shall be arranged with at least 100 mm clearance between two sets of terminal blocks and between terminal blocks and junction box walls.
7.00.00	**INTERNAL PANELS/ SYSTEM CABINETS WIRING**
7.01.00	Internal panel/cabinet wiring shall be of multi-stranded copper conductor with FRLS PVC insulation without shield and outer sheath meeting the requirements of VDE 0815.
7.02.00	All internal wires shall be provided with tag and identification nos. etched on tightly fitted ferules at both ends. All wires directly connected to trip devices shall be distinguished by one additional red colour ferrule.
7.03.00	All external connection shall be made with one wire per termination point. Wires shall not be tapped or spliced between terminal points.
7.04.00	All floor slots of desk/panels/cabinets used for cable entrance shall be provided with removable gasketed gland plates and sealing material. Split type grommets shall be used for prefabricated cables.
7.05.00	All the special tools as may be required for solder less connections shall be provided by Bidder.
7.06.00	Wire sizes to be utilised for internal wiring.
	(i) Current (4-20 mA), low voltage signals (48V); Ammeter/Voltmeter circuit, control switches etc. for electrical system. — 0.5 Sq.mm.
	(ii) Power supply and internal illumination. — 2.5Sq.mm. minimum (shall be as per load requirement.)

CLAUSE NO.	TECHNICAL REQUIREMENTS
8.02.00	Cables shall be segregated as per IEEE Std.-422. In vertically stacked trays, the higher voltage cable shall be in higher position and instrumentation cable shall be in bottom tier of the tray stack. The distance between instrumentation cables and those of other system shall be as follows: From 11 kV/6.6 kV/3.3 kV tray system - 914 mm From 415V tray system - 610 mm From control cable tray system - 305 mm
8.03.00	Cables shall terminate in the enclosure through cable glands. All cable glands shall be properly gasketed. Sealing (to prevent ingress of dust entry and propagation of fire) shall be provided for all floor slots used for cable entrance. Compression cable glands (double for armoured and single for other cables) shall be provided.
8.04.00	Not in use
8.05.00	The cables emanating from redundant equipment/devices shall be routed through different paths. The above segregation of cables & wiring for redundant equipments/devices shall be in accordance with IEEE-Std-422.
9.00.00	**CABLE LAYING AND ACCESSORIES**
9.01.00	CABLE LAYING 1 Cables shall be laid strictly in line with cable schedule. 2 Identification tags for cables. Indelible tags to be provided at all terminations, on both sides of wall or floor crossing, on each conduit/duct/pipe entry/exit, and at every 20 m in cable trench/tray. 3 Cable tray numbering and marking. To be provided at every 10m and at each end of cable way & branch connection. 4 No jointing is permissible for Instrumentation cables. For other cables Jointing for more than 250 Meters run of cable shall be permitted. 5 Buried cable protection With concrete slabs; Route markers at every 20 Meters along the route & at every bend. 6 Road Crossings Cables to pass through buried high density PE pipes encased in PCC. At least 300 mm clearance shall be provided between - HT power & LT power cables, - LT power & LT control/instrumentation cables,

CLAUSE NO.	TECHNICAL REQUIREMENTS
	Spacing between cables of same voltage grade shall be in accordance with the derating criteria adopted for cable sizing. 7 Segregation (physical isolation to prevent fire jumping) a All cable associated with the unit shall be segregated from cables of other Units. b Interplant cables of station auxiliaries and unit critical drives shall be segregated in such a way that not more than half of the drives are lost in case of single incident of fire. 8 Cable clamping All cables laid on trays shall be neatly dressed up & suitably clamped/tied to the tray. For cables in trefoil formation, trefoil clamps shall be provided. 9 Optical fiber cables (OFCs) : Outside Building Area - to be laid necessarily inside GI conduit with support from cable tray/Trestle structure **Inside Building Area – to be laid on separate cable sub-trays** While buried- in separate burried trench approx.1.0 meter depth, to be laid in 2" rodent proof HDPE conduits covered with sand, brick, laid breadth-wise and soil along the pipe line route by contractor; While crossing roads - to be laid in GI/ rodent proof HDPE conduits with sand filling at bottom and sand, soil filling at top with cement concrete; While crossing canals/river- to be laid in rodent proof HDPE conduits within hume pipe. 10 **Laying of Network Cable (UTP/STP) :** **Out side Building Area- to be laid necessarily inside GI conduits with support from cable tray / Trestle structure.** **Inside Building Area- to be laid necessarily inside GI conduits on separate cable sub-trays.**
9.02.00	Bidder shall supply and install all cable accessories and fittings like Light Interface Units, Surge suppressors, Opto isolators, Interface Converters, Fibre Optic Card Cage, Fibre Optic Line Driver, Repeater / Modem (for Optical Fibre Cables), cable glands, grommets, lugs, termination kits etc. on as required basis.
9.03.00	Cables, which terminate in cabinets of draw out sections shall have sufficient cable coiled in the bottom of the cabinet to permit full withdrawal of draw out sections without disconnecting the cables. When prefabricated cables with factory connectors on both ends are longer than required, the excess cable shall be coiled in the bottom of one or both termination cabinets.
9.04.00	The Bidder shall be responsible for proper grounding of all equipment under this package. Further, proper termination of cable shields shall be verified and the grounding of the same shall be coordinated so as to achieve grounding of all instrumentation cable shields at same potential. This shall be completed prior to system tests.

CLAUSE NO.	TECHNICAL REQUIREMENTS
9.05.00	The Contractor shall take full care while laying / installing cables as recommended by cable manufacturers regarding pulling tensions and cable bends. Cables damaged in any way during installation shall be replaced at the expense of the Contractor.
10.00.00	**FIELD MOUNTED LOCAL JUNCTION BOXES**
	(i) No. of ways: 12/24/36/48/64/72/96/128 with 20% spares terminals.
	(ii) Material and Thickness: 4mm thick Fiberglass Reinforced Polyester (FRP).
	(iii) Type: Screwed at all four corners for door. Door gasket shall be of synthetic rubber.
	(iv) Mounting clamps and accessories: Suitable for mounting on walls, columns, structures etc. The brackets, bolts, nuts, screws, glands required for erection shall be of SS, included in Bidders scope of supply.
	(v) Type of terminal blocks: Rail mounted cage-clamp type suitable for conductor size upto 2.5 mm^2. A M6 earthing stud shall be provided.
	(vi) Protection Class: IP: 55 minimum for indoor & IP-65 minimum for outdoor applications.
	(vii) Grounding: To be provided.
	(viii) Color: RAL 7035
11.00.00	**CONDUITS**
11.01.00	Conduits shall be generally used for interconnecting cables from field instruments to Local JB's. All rigid conduits, couplings and elbows shall be hot dipped galvanised rigid mild steel in accordance with IS: 9537 Part-I (1980) and Part-II (1981). The conduit interior and exterior surfaces shall have continuous zinc coating with an overcoat of transparent enamel lacker or zinc chromate. Flexible conduit shall be heat resistant **terne coated steel** with , water leak, fire and rust proof protected *for the areas of* Mills,Drum, Main Steam, RH steam Air Heaters and Furnace, BFPDT's . *And for remaining applications, water leak, fire and rust proof flexible GI conduits shall be provided.* The temperature rating of flexible conduit shall be suitable for actual application.
11.02.00	All rigid conduit fittings shall conform to the requirements of IS: 2667, 1976. Galvanized steel fitting shall be used with steel conduit. All flexible conduit fittings shall be liquid tight, galvanized steel. The end fittings shall be compatible with the flexible conduit supplied.
11.03.00	Conduit sealing, explosion proof, dust proof and other types of special fittings shall be provided as required by these specifications and shall be consistent with the area and equipment with which they are installed. Fittings installed outdoors and in damp locations shall be sealed and gasketed. Hazardous area fittings and conduits sealing shall conform with NEC requirements for the area classification.
11.04.00	Contractor shall provide double locknuts on all conduit terminations not provided with threaded hubs and couplings. Water tight conduit unions and rain tight conduit hubs shall be

CLAUSE NO.	TECHNICAL REQUIREMENTS
	utilised for all the application which shall be exposed to weather. Moisture pockets shall be eliminated from conduits.
11.05.00	Conduits shall be securely fastened to all boxes and cabinets.
12.00.00	**CABLE SUB-TRAY & SUPPORT**
12.01.00	The cable sub-trays and the supporting system, to be generally used between Local/Group JBs and the main cable trays and the same shall be furnished and installed by the Contractor. It is the assembly of sections and associated fittings forming a rigid structural system used to support the cable from the equipment or instrument enclosure upto the main cable trays (trunk route).
12.02.00	The covers on the cable sub-trays shall be used for protection of cables in areas where damage may occur from falling objects, welding spark, corrosive environment, etc. & shall be electrically continuous and solidly grounded.

	C&I SPECIFICATION FOR LIME DOSING SYSTEM	SECTION: C SUB SECTION: C&I

INSTRUMENT STUB DETAILS

910/2020/PS-PEM-MAX

PRESS. MEASUREMENT

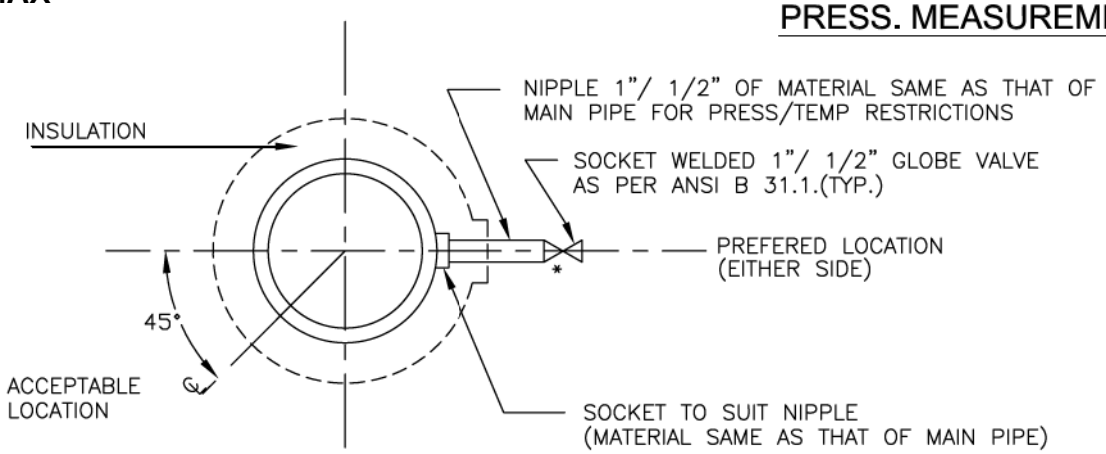

ELEVATION
LIQUID SERVICE

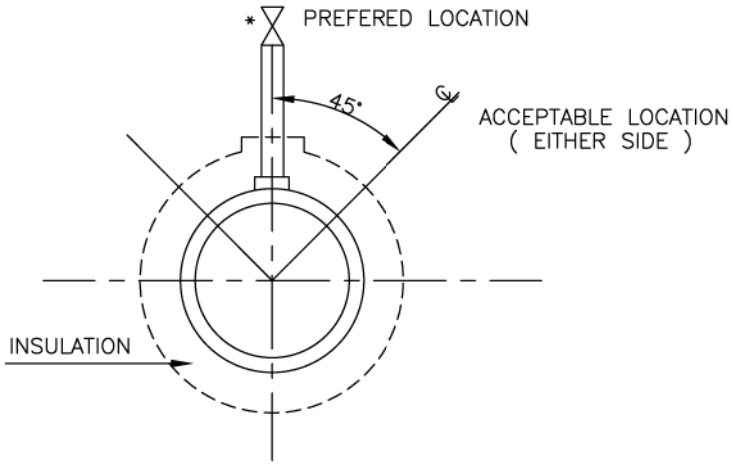

ELEVATION
STEAM SERVICE

PRESSURE CONNECTION ON HORIZONTAL PIPE

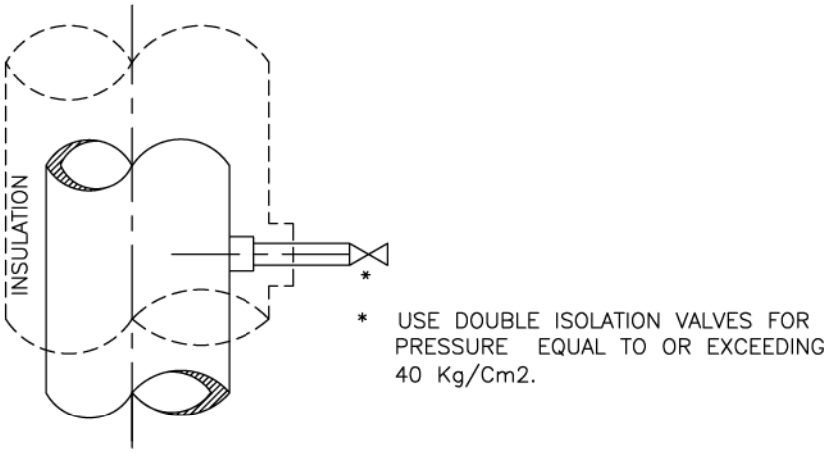

ELEVATION
LIQUID OR STEAM SERVICE

PRESSURE CONNECTIONS ON VERTICAL PIPES

FOR TENDER PURPOSE ONLY

एन टी पी सी NTPC

N T P C LIMITED
(A GOVERNMENT OF INDIA ENTERPRISE)
ENGINEERING DIVISION

PROJECT: TYPICALTHERMAL POWER PROJECT

TITLE: INSTRUMENT SOURCE CONNECTION DETAILS

REV. NO.	DESCRIPTION	DRAWN	DESIGN	CHKD.	M	E	C	T.G. C&I	ARCH.	APPD.	DATE
A	FIRST ISSUE										21.08.12

CLEARED BY 325

SIZE	SCALE	DRG. NO.	REV. NO.
A4	N.T.S.	0000-999-POI-A-035 Sh-1 Of 14	A

This document is the property of NATIONAL THERMAL POWER CORPORATION LTD.
No part of this document will be reproduced by any means without the written permission.

910/2020/PS-PEM-MAX

PRESSURE MEASUREMENT

(SYSTEM PR.>40Kg/Sq Cm CL 9000)

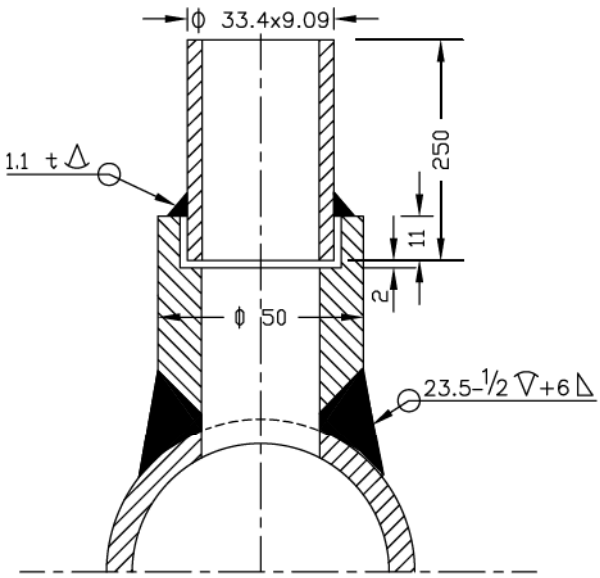

(SYSTEM PR.>40Kg/Sq Cm CL 6000)

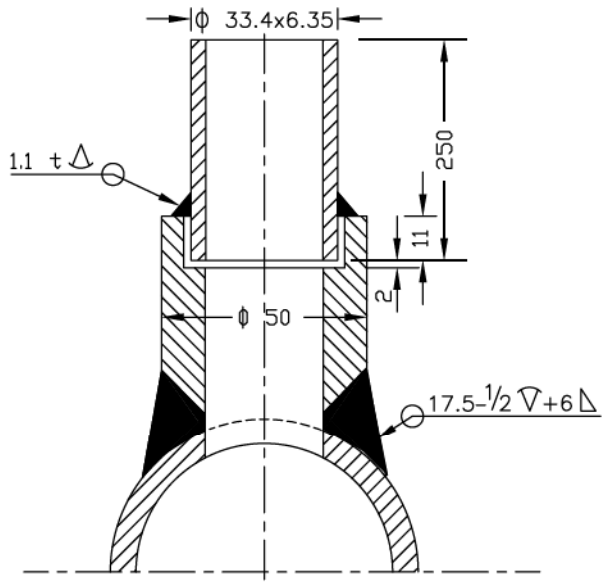

(SYSTEM PR. <40Kg/Sq cm Nb 25 CL 3000)

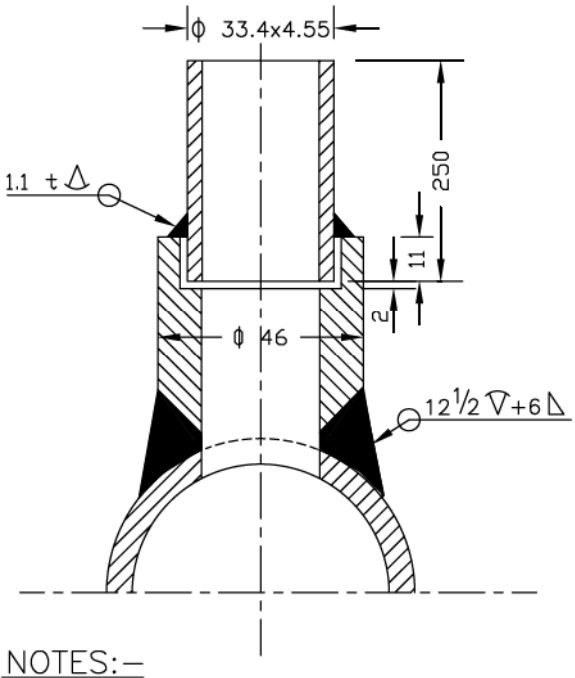

(SYSTEM PR. <40Kg/Sq cm Nb 15 CL 3000)

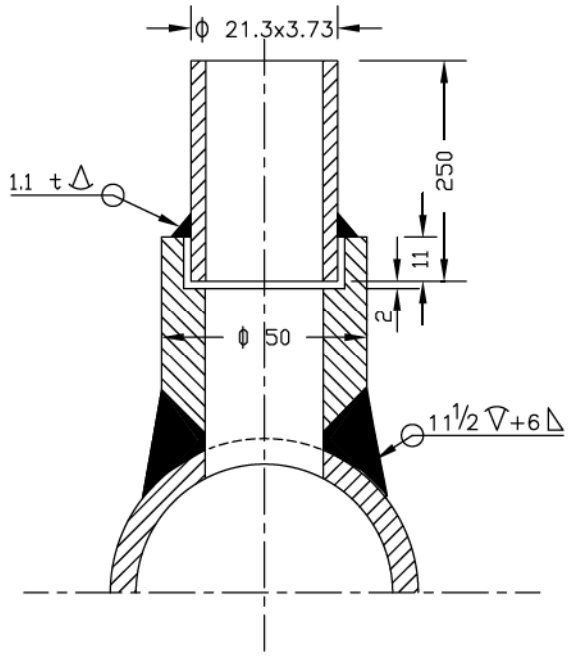

NOTES:–

1. MATERIAL OF THE BOSS AND NIPPLE SHALL BE THE SAME AS THE PIPE INTO WHICH IT IS WELDED AND CONFIRM TO ANSI B 16.11.
2. THE LENGTH OF THE NIPPLE SHOULD BE 250mm.
3. THE OTHER END OF THE NIPPLE SHALL BE SOCKET WELDED WITH 1" GLOBE VALVE OF MATERIAL AS PER ANSI B 16.1.
4. TWO ISOLATED VALVES ARE TO BE USED FOR PRESSURE = >40 Kg/Cm2.
5. EDGE HOLE MUST BE CLEAN AND SQUARE OR ROUNDED SLIGHTLY (1/64" RADIUS) FREE FROM BURRS, WIRE EDGES OR OTHER IRREGULARITIES.
6. ORIENTATION OF TAP WILL BE VARY WITH TYPE OF PROCESS FLUID AND NATURE OF RUN OF THE PIPE.
7. ACTIVITIES TO BE COMPLETED AT THE SHOP, WELD THE COUPLING (OR BOSS) ON THE PIPE AND DRILL PRESSURE CONNECTION HOLE (SAME AS I D OF NIPPLE) IN THE PIPE IN ALLIGNMENT WITH HOLE IN THE COUPLING.
8. ALL DIMENSIONS ARE IN mm UNLESS OTHERWISE STATED.

FOR TENDER PURPOSE ONLY

एन टी पी सी NTPC

N T P C LIMITED
(A GOVERNMENT OF INDIA ENTERPRISE)
ENGINEERING DIVISION

REV. NO.	DESCRIPTION	DRAWN	DESIGN	CHKD.	M	E	C	C&I	ARCH.	APPD.	DATE
A	FIRST ISSUE							T.G.			21.08.12

CLEARED BY

PROJECT: TYPICALTHERMAL POWER PROJECT

TITLE: INSTRUMENT SOURCE CONNECTION DETAILS

SIZE	SCALE	DRG. NO.	REV. NO.
A4	N.T.S.	0000-999-POI-A-035 Sh-2 Of 14	A

This document is the property of NATIONAL THERMAL POWER CORPORATION LTD.
No part of this document will be reproduced by any means without the written permission.

PRESS. MEASUREMENT

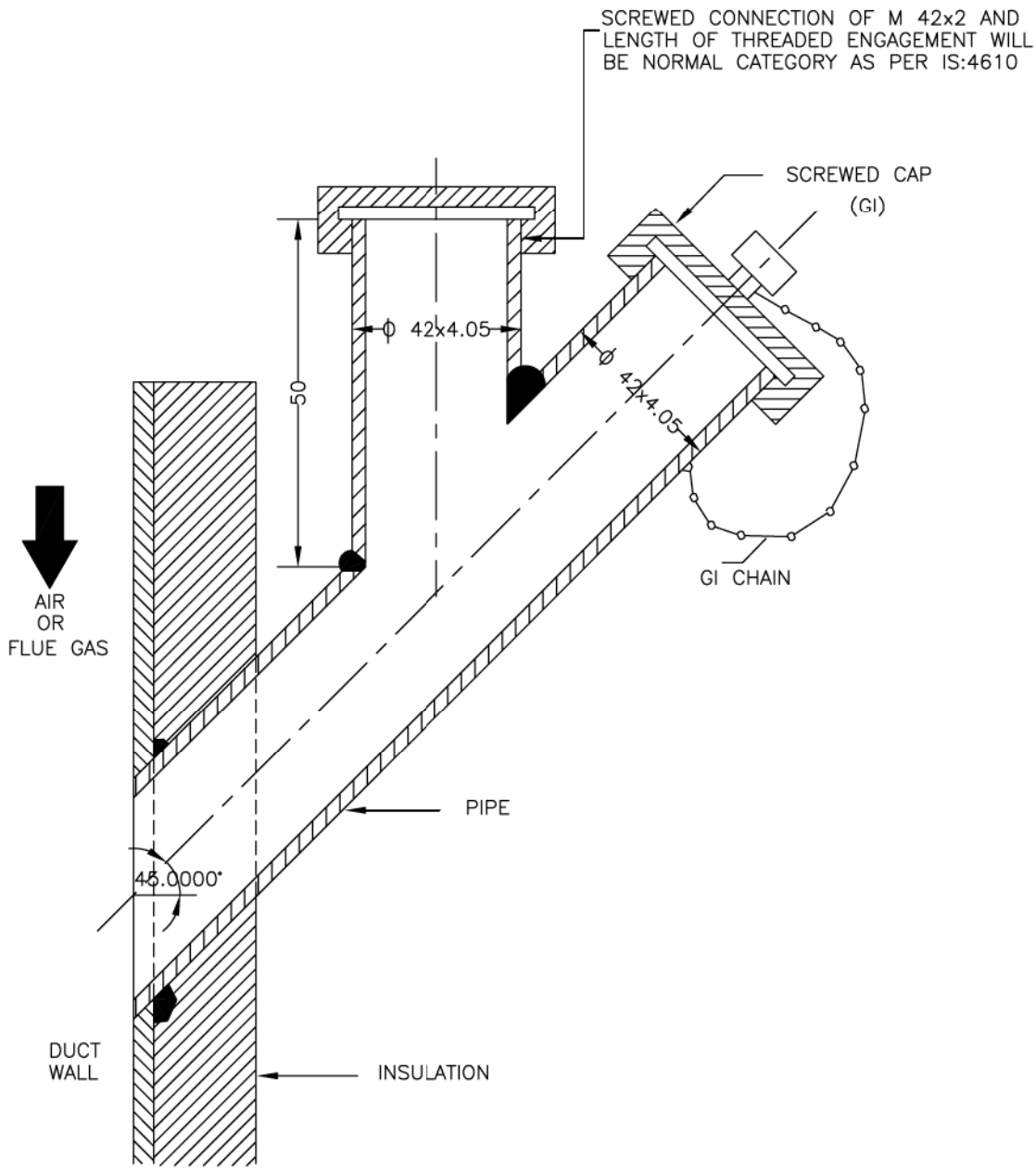

NOTES:–

1. THIS TYPE OF PRESSURE CONNECTON SHALL BE PROVIDED FOR PRESSURE MEASUREMENTS IN AIR AND FLUE GAS DUCT/FURNACE.
2. DIMENSIONS ARE INDICATIVE ONLY.

FOR TENDER PURPOSE ONLY

This document is the property of NATIONAL THERMAL POWER CORPORATION LTD.
No part of this document will be reproduced by any means without the written permission.

REV. NO.	DESCRIPTION	DRAWN	DESIGN	CHKD.	M	E	C	T.G. C&I	ARCH.	APPD.	DATE
A	FIRST ISSUE										21.08.12

CLEARED BY

एन टी पी सी NTPC

N T P C LIMITED
(A GOVERNMENT OF INDIA ENTERPRISE)
ENGINEERING DIVISION

PROJECT: TYPICALTHERMAL POWER PROJECT

TITLE: INSTRUMENT SOURCE CONNECTION DETAILS

SIZE	SCALE	DRG. NO.	REV. NO.
A4	N.T.S.	0000-999-POI-A-035 Sh-3 Of 14	A

LEVEL MEASUREMENT

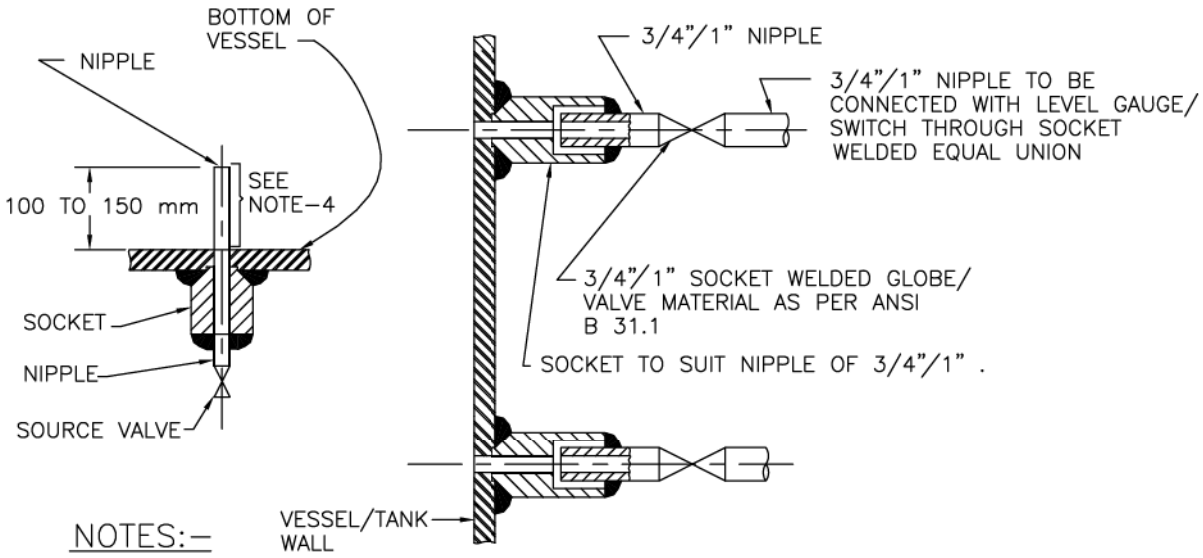

NOTES:-

1. THIS TYPE OF PROCESS CONNECTION SHALL BE USED FOR LEVEL GAUGE AND EXTERNAL CAGE TYPE FLOAT OR DISPLACER OPERATED LEVEL SWITCH.
2. FOR GAUGES 3/4" NIPPLE ALONG WITH 3/4" SW SOURCE VALVE AND FOR SWITCHES 1" NIPPLE ALONG WITH 1" SW SOURCE VALVE SHALL BE PROVIDED AS PROCESS CONNECTION.
3. SOURCE CONNECTION ON VESSEL SHOULD NOT BE LOCATED AT PLACES SUBJECTED TO INTERFACE AND TURBULENCE FROM INLETS AND OUTLETS.
4. IF LOWER CONNECTION IS TAKEN FROM BOTTOM OF THE VESSEL THEN THE NIPPLE MUST BE 100 mm TO 150 mm ABOVE THE BOTTOM OF THE VESSEL.

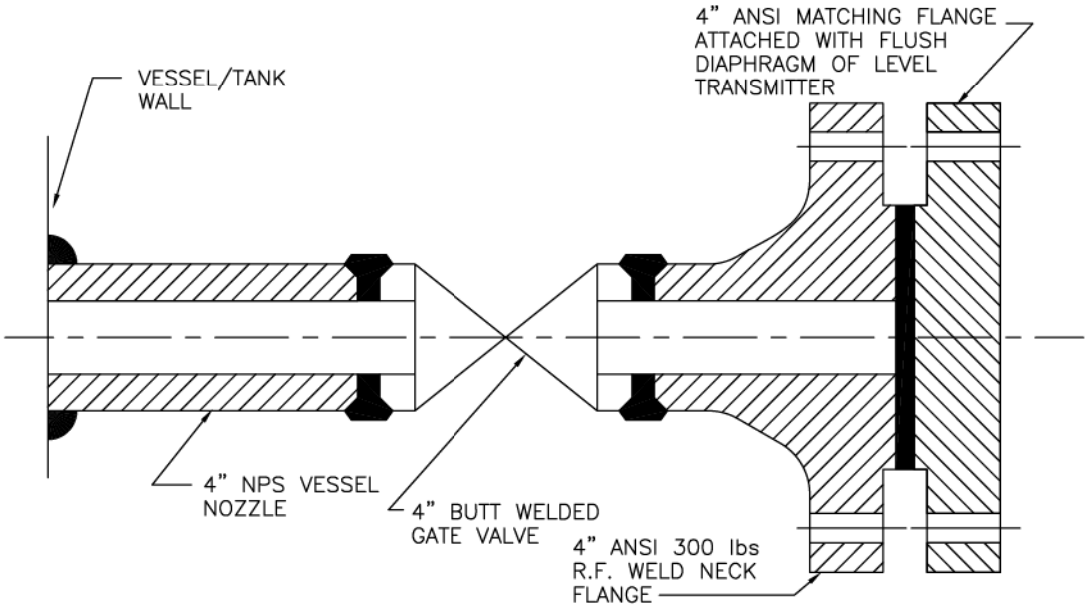

NOTES:-

1. THIS TYPE OF PROCESS CONNECTION SHALL BE PROVIDED FOR TANK LEVEL MEASUREMENT OF VISCOUS OR CORROSIVE LIQUID USING FLUSH DIAPHRAGM/WAFER TYPE LEVEL TRANSMITTER.
2. WELDING OF MATCHING FLANGE TO GATE VALVE SHALL BE DONE BY BIDDER.

FOR TENDER PURPOSE ONLY

एन टी पी सी NTPC

N T P C LIMITED
(A GOVERNMENT OF INDIA ENTERPRISE)
ENGINEERING DIVISION

PROJECT: TYPICALTHERMAL POWER PROJECT

TITLE: INSTRUMENT SOURCE CONNECTION DETAILS

REV. NO.	DESCRIPTION	DRAWN	DESIGN	CHKD.	M	E	C	C&I	ARCH.	APPD.	DATE
A	FIRST ISSUE							T.G.			21.08.12

CLEARED BY

SIZE	SCALE	DRG. NO.	REV. NO.
A4	N.T.S.	0000-999-POI-A-035 Sh-13 Of 14	A

This document is the property of NATIONAL THERMAL POWER CORPORATION LTD.
No part of this document will be reproduced by any means without the written permission.

LEVEL MEASUREMENT

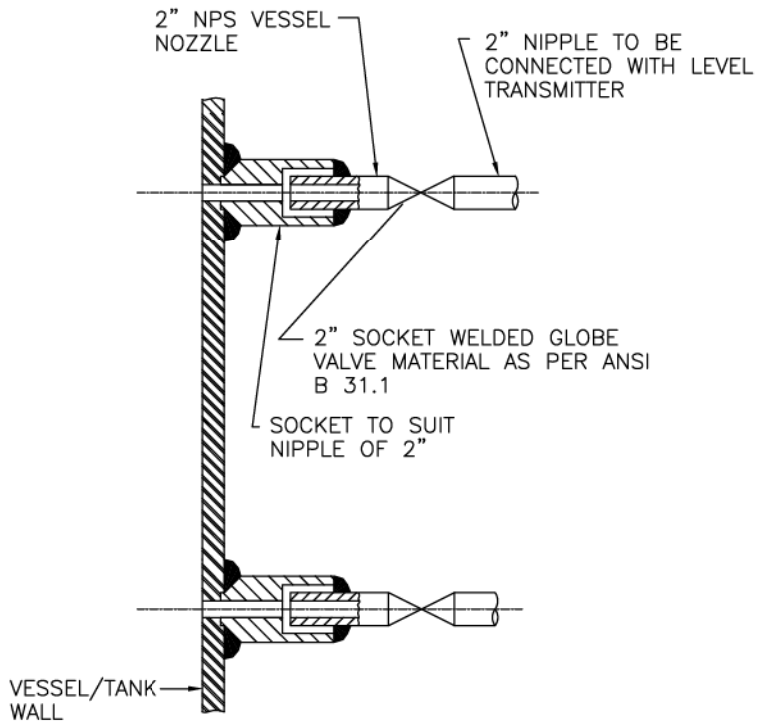

NOTES:–

1. THIS TYPE OF PROCESS CONNECTION SHALL BE USED FOR DISPLACER TYPE LEVEL TRANSMITTER.
2. SOURCE CONNECTION ON VESSEL SHOULD NOT BE LOCATED AT PLACES SUBJECTED TO INTERFACE AND TURBULENCE FROM INLETS AND OUTLETS.
3. IF LOWER CONNECTION IS TAKEN FROM BOTTOM OF THE VESSEL THEN THE NIPPLE MUST BE 100 mm TO 150 mm ABOVE THE BOTTOM OF THE VESSEL.

FOR TENDER PURPOSE ONLY

This document is the property of NATIONAL THERMAL POWER CORPORATION LTD.
No part of this document will be reproduced by any means without the written permission.

REV. NO.	DESCRIPTION	DRAWN	DESIGN	CHKD.	M	E	C	T.G. C&I	ARCH.	APPD.	DATE
A	FIRST ISSUE										21.08.12

CLEARED BY

एन टी पी सी NTPC

N T P C LIMITED
(A GOVERNMENT OF INDIA ENTERPRISE)
ENGINEERING DIVISION

PROJECT: TYPICALTHERMAL POWER PROJECT

TITLE: INSTRUMENT SOURCE CONNECTION DETAILS

SIZE	SCALE	DRG. NO.	REV. NO.
A4	N.T.S.	0000-999-POI-A-035 Sh–14 Of 14	A

	C&I SPECIFICATION FOR LIME DOSING SYSTEM	SECTION: C SUB SECTION: C&I

INSTRUMENT INSTALLATION DRAWING

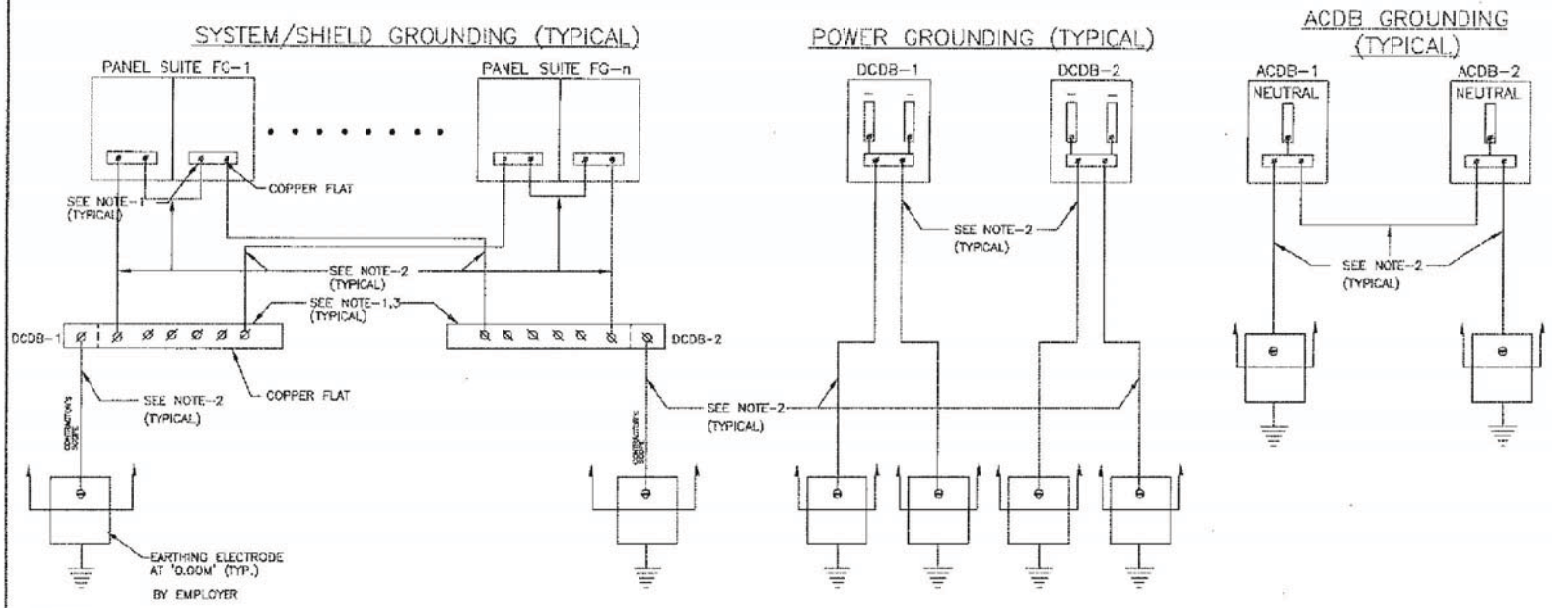

NOTES:--

1. SUPPLY, ERECTION, TERMINATION OF CABLES, FLATS ETC. REQUIRED FOR PROPER GROUNDING OF CONTRACTOR's CONTROL SYSTEM, SYSTEM CABINETS, POWER SUPPLY CABINETS ETC. ARE IN THE SCOPE OF CONTRACTOR.
2. CABLE IN CONTRACTOR'S SCOPE.
3. TO BE LOCATED IN DCDB.
4. EXACT LOCATION, ARRANGEMENTS OF FLATS ETC. SHALL BE AS FINALISED WITH CONTRACTOR. DURING DETAILED ENGINEERING.
5. CABINET BODY, CABINET BOTTOM PLATE, CABINET DOORS ARE TO BE CONNECTED TO PANEL EARTH FLAT COPPER CABLE BY CONTRACTOR.

FOR TENDER PURPOSE ONLY

This document is the property of NATIONAL THERMAL POWER CORPORATION LTD. No part of this document will be reproduced by any means without the written permission.

एन टी पी सी NTPC

N T P C LIMITED
(A GOVERNMENT OF INDIA ENTERPRISE)
ENGINEERING DIVISION

PROJECT: TYPICAL THERMAL POWER PROJECT

TITLE: INSTRUMENTATION CABLING DIAGRAM
GROUNDING SCHEME FOR CABINETS / PANELS / POWER SUPPLY

REV.NO.	DESCRIPTION	DRAWN	DESIGN	CHKD.	M	E	C	C&I	ARCH.	APPD	DATE
A	FIRST ISSUE										21.08.12

CLEARED BY

SIZE	SCALE	DRG. NO.	REV. NO.
A3	N.T.S.	0000-999-POI-A-019A SH-1 OF 2	A

GROUNDING FOR EACH ROW OF PANELS (TYPICAL)

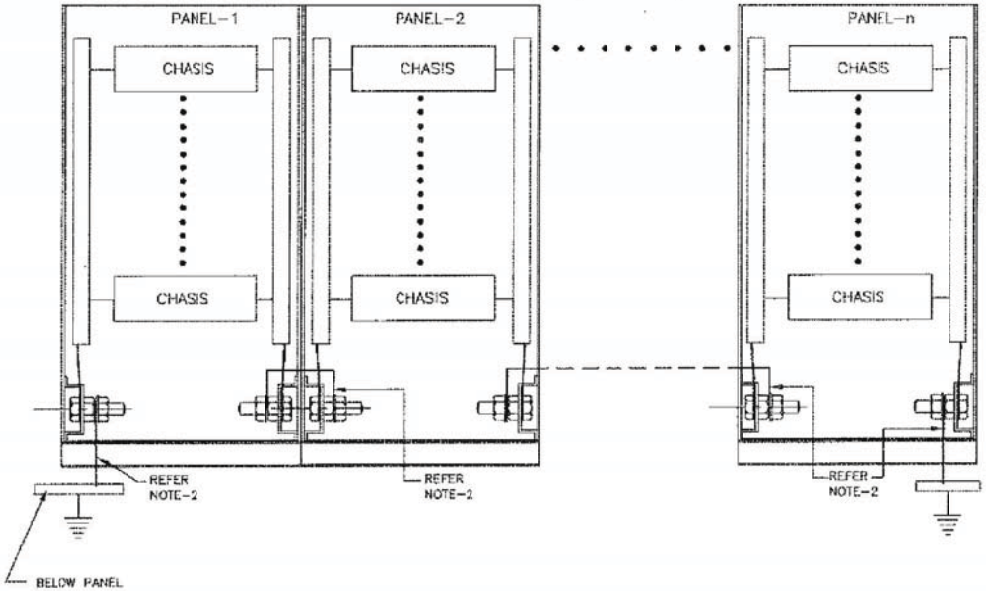

NOTES:-

1. SUPPLY, ERECTION, TERMINATION OF CABLES, FLATS ETC. REQUIRED FOR PROPER GROUNDING OF CONTRACTOR's CONTROL SYSTEM, SYSTEM CABINETS, POWER SUPPLY CABINETS ETC. ARE IN THE SCOPE OF CONTRACTOR.
2. CABLE IN CONTRACTOR'S SCOPE.
3. TO BE LOCATED IN DCDB.
4. EXACT LOCATION, ARRANGEMENTS OF FLATS ETC. SHALL BE AS FINALISED WITH CONTRACTOR. DURING DETAILED ENGINEERING.
5. CABINET BODY, CABINET BOTTOM PLATE, CABINET DOORS ARE TO BE CONNECTED TO PANEL EARTH FLAT COPPER CABLE BY CONTRACTOR.

FOR TENDER PURPOSE ONLY

This document is the property of NATIONAL THERMAL POWER CORPORATION LTD.
No part of this document will be reproduced by any means without the written permission.

एन टी पी सी NTPC

N T P C LIMITED
(A GOVERNMENT OF INDIA ENTERPRISE)
ENGINEERING DIVISION

REV.NO.	DESCRIPTION	DRAWN	DESIGN	CHKD.	M	E	C	C&I	ARCH.	APPD	DATE
A	FIRST ISSUE										21.08.12

CLEARED BY

PROJECT: TYPICAL THERMAL POWER PROJECT

TITLE: INSTRUMENTATION CABLING DIAGRAM
GROUNDING SCHEME FOR CABINETS / PANELS / POWER SUPPLY

SIZE	SCALE	DRG. NO.	REV. NO.
A3	N.T.S.	0000-999-POI-A-019A SH-2 OF 2	A

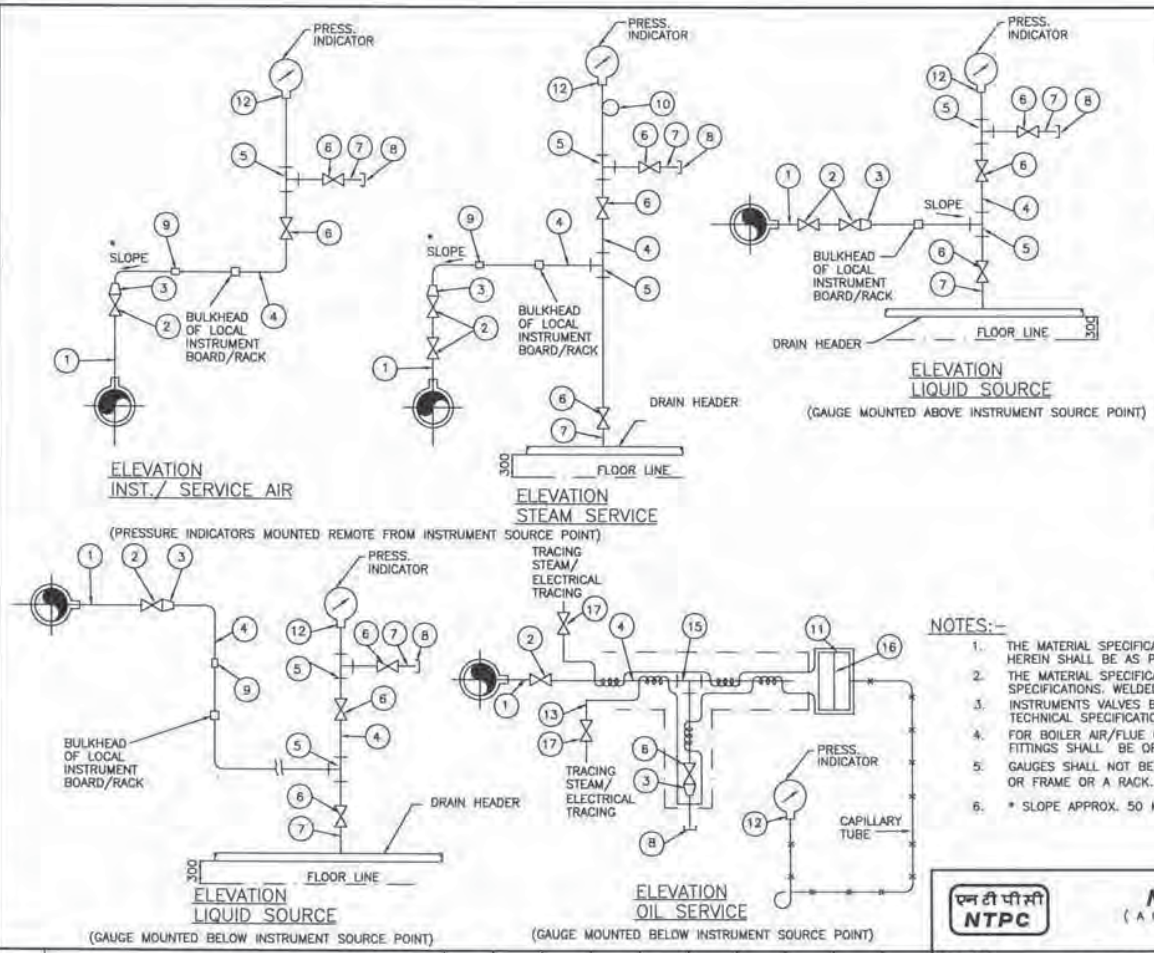

LIST OF MATERIALS

ITEM NO.	DESCRIPTION
1.	1/2" , 3/4" , 1" NPS SCH 40/80/160/XXS/P91 (AS PER PROCESS REQUIREMENT) NIPPLE OF MATERIAL SAME AS THAT OF MAIN PIPE.
2.	1/2"/3/4"/1' SW GLOBE VALVE/GATE VALVE
3.	3/4" / 1" x 1/2" SW REDUCING INSERT
4.	1/2" / 3/4" PIPE
5.	1/2" / 3/4" SW EQUAL TEE
6.	1/2" / 3/4" SW GLOBE VALVE.
7.	1/2" / 3/4" NPS SW x 1/2" / 3/4" NPT(M) CARBON/ALLOY STEEL NIPPLE.
8.	1/2" / 3/4" NPT(F) CAP.
9.	1/2" / 3/4" PIPE UNION.
10.	6" SS SYPHON
11.	1/2" BLIND 300lbs RF ANSI FLANGE DRILLED AND TAPED FOR 1" NPT PIPE.
12.	SUITABLE ADAPTER.
13.	1/4" CHROME MOLY STEEL TUBE.
14.	
15.	1"/3/4" SW EQUAL TEE.
16.	DIAPHRAGM(WAFER ELEMENT)
17.	ISOLATION VALVE 316 SS,1/4"SW

NOTES:-

1. THE MATERIAL SPECIFICATION AND SCHEDULE NO. OF IMPULSE PIPE & NIPPLE AS LISTED HEREIN SHALL BE AS PER TECHNICAL SPECIFICATIONS.
2. THE MATERIAL SPECIFICATION AND RATING OF FITTINGS AS LISTED SHALL BE AS PER SPECIFICATIONS. WELDED/THREADED FITTINGS SHALL CONFIRM TO ANSI-B.16-11.
3. INSTRUMENTS VALVES BODY STEM MATERIAL AND PRESSURE CLASS SHALL BE AS PER TECHNICAL SPECIFICATIONS.
4. FOR BOILER AIR/FLUE GAS SERVICES SOURCE CONNECTIONS IMPULSE PIPING AND ALL FITTINGS SHALL BE OF 3/4" NB SIZE.
5. GAUGES SHALL NOT BE MOUNTED ON THE PIPE. IT WILL BE MOUNTED ON A CHANNEL OR FRAME OR A RACK.
6. * SLOPE APPROX. 50 MM / METRE.

FOR TENDER PURPOSE ONLY

एन टी पी सी NTPC

N T P C LIMITED
(A GOVERNMENT OF INDIA ENTERPRISE)
ENGINEERING DIVISION

PROJECT: TYPICAL THERMAL POWER PROJECT

TITLE: INSTRUMENT INSTALLATION DIAGRAM (FOR PRESSURE GAUGE)

REV.NO.	DESCRIPTION	DRAWN	DESIGN	CHKD.	M	E	C	C&I	ARCH.	APPD	DATE
A	FIRST ISSUE							T.G.			21.08.12

CLEARED BY

SIZE	SCALE	DRG. NO.	REV. NO.
A3	N.T.S.	0000-999-POI-A-022	A

This document is the property of NATIONAL THERMAL POWER CORPORATION LTD.
No part of this document will be reproduced by any means without the written permission.

This document is the property of NATIONAL THERMAL POWER CORPORATION LTD.
No part of this document will be reproduced by any means without the written permission.

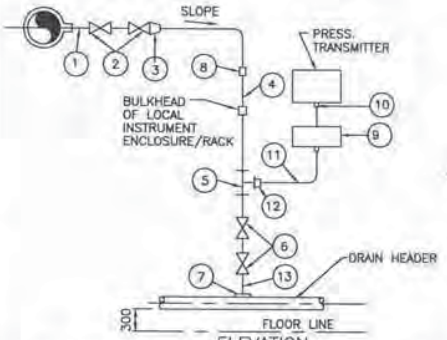

ELEVATION
TRANSMITTER MOUNTED BELOW INSTRUMENT SOURCE POINT

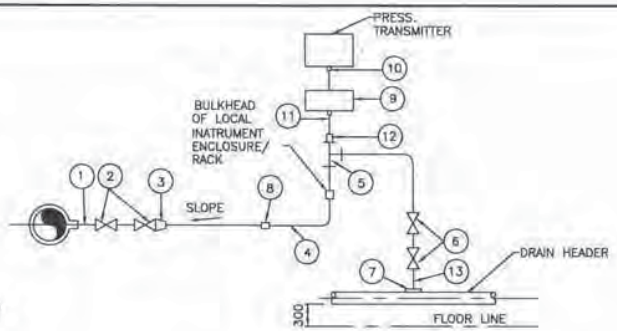

ELEVATION
TRANSMITTER MOUNTED ABOVE INSTRUMENT SOURCE POINT

LIQUID PRESSURE MEASUREMENT

LIST OF MATERIALS

ITEM NO.	DESCRIPTION
1.	1/2"/ 3/4"/1"NPS SCH. 80/160/XXS/P91 NIPPLE OF MATERIAL SAME AS THAT OF MAIN PIPE.
2.	3/4"/1" SW GLOBE VALVE.
3.	3/4"/1" TO 1/2" REDUCING INSERT
4.	1/2" NPS PIPE
5.	1/2" SW EQUAL TEE
6.	1/2"SW GLOBE VALVE
7.	1/2"NPS SCH. 80/160 SWx1/2"CS/AS COUPLER
8.	1/2" PIPE UNION
9.	2/3 VALVE MANIFOLD (FOR DETAIL SEE DRAWING NO.0000-102-POI-A-023.
10.	SUITABLE ADAPTER
11.	SS TUBE
12.	1/2" PIPE x 1/2"TUBE UNION
13.	1/2"NPS SCH. 80/160 SWx1/2" NPT(M) CS/AS NIPPLE

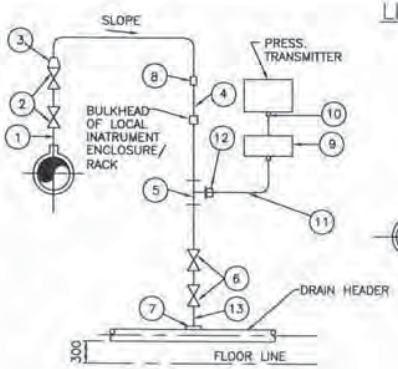

ELEVATION
TRANSMITTER MOUNTED BELOW INSTRUMENT SOURCE POINT

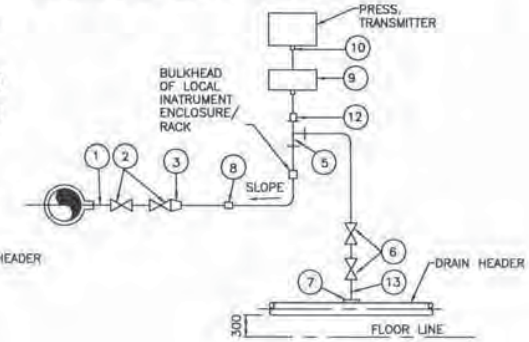

ELEVATION
TRANSMITTER MOUNTED ABOVE INSTRUMENT SOURCE POINT

STEAM PRESSURE MEASUREMENT

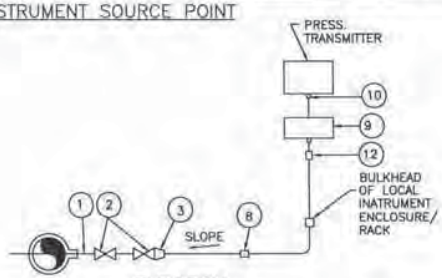

ELEVATION
VACCUM PRESSURE MEASUREMENT

NOTES:-

1. SAME NOTES UNDER DRG. NO. 0000-999-POI-A-023.
2. FOR VACUUM APPLICATION OTHER PORT OF TRANSMITTER SHALL BE KEPT OPEN TO ATMOSPHERE.

FOR TENDER PURPOSE ONLY

एन टी पी सी NTPC

N T P C LIMITED
(A GOVERNMENT OF INDIA ENTERPRISE)
ENGINEERING DIVISION

PROJECT: TYPICAL THERMAL POWER PROJECT

TITLE: INSTRUMENT INSTALLATION DIAGRAM (PRESSURE MEASUREMENT USING PRESS /DP TRANSMITTERS STEAM/LIQUID VACUUM)

REV.NO.	DESCRIPTION	DRAWN	DESIGN	CHKD.	M	E	C	C&I	ARCH.	APPD	DATE
A	FIRST ISSUE							T.G.			21.08.12

CLEARED BY

SIZE	SCALE	DRG. NO.	REV. NO.
A3	N.T.S.	0000-999-POI-A-025	A

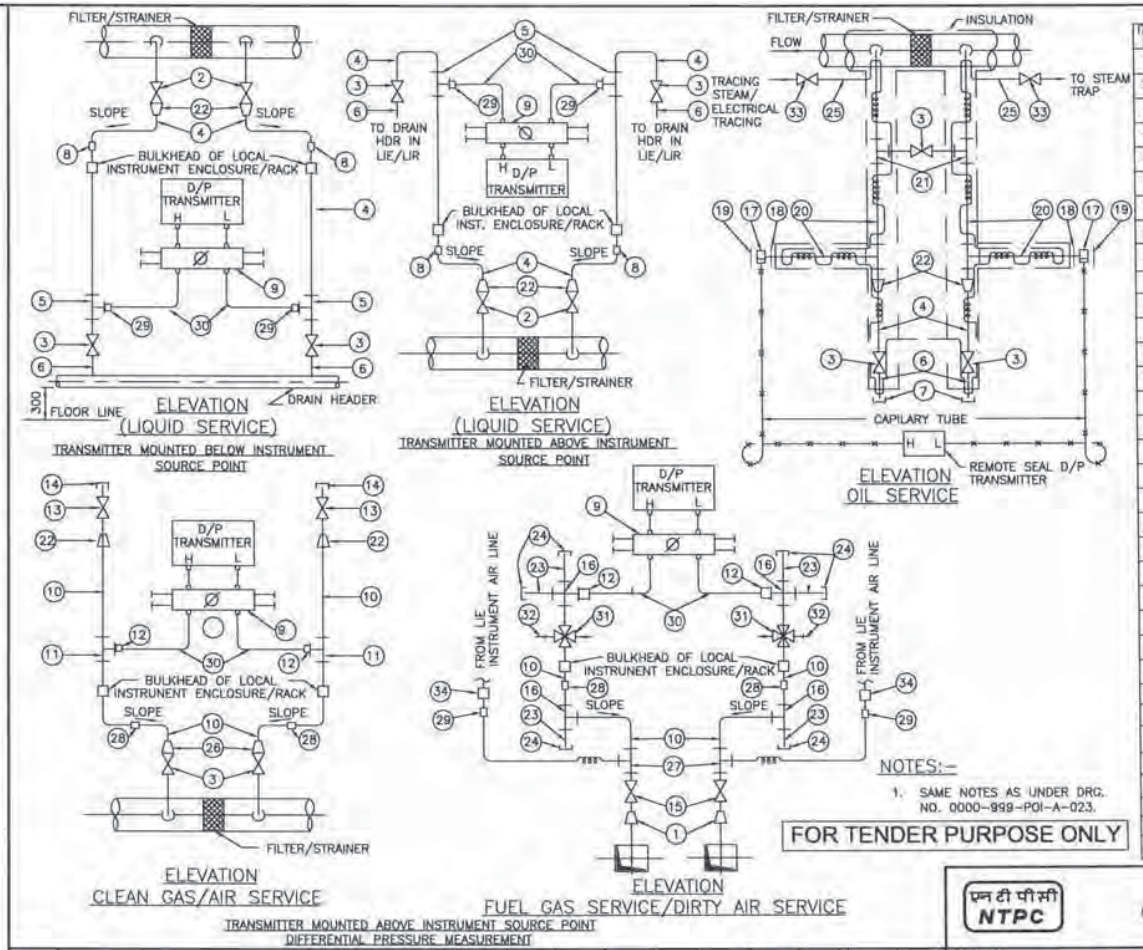

NOTES:-

1. SAME NOTES AS UNDER DRG. NO. 0000-999-POI-A-023.

FOR TENDER PURPOSE ONLY

LIST OF MATERIALS

ITEM NO.	DESCRIPTION
1.	42x2 TO 3/4" SW REDUCING INSERT.
2.	3/4" SW GLOBE VALVE.
3.	1/2" SW GLOBE VALVE FOR LIQUID APPLICATION & 3/4"/1" IN GAS/AIR APPLICATION
4.	1/2" NPS 40/80/160 (AS PER PROCESS REQUIREMENT) CARBON/ALLOY STEEL PIPE.
5.	1/2" SW EQUAL TEE.
6.	1/2" NPS SW x 1/2" NPT (M) NIPPLE.
7.	1/2" NPT (F) CAP.
8.	1/2" PIPE x 1/2" PIPE UNION.
9.	5 VALVE MANIFOLD (FOR DETAIL REFER DRAWING NO.0000-999-POI-A-026.
10.	3/4" SCH 80 CARBON/ALLOY STEEL PIPE.
11.	3/4"/1/2" SW EQUAL TEE.
12.	3/4"x1/2" TUBE UNION.
13.	1/2" SCREWED GLOBE VALVE.
14.	1/2" NPT (M) PLUG.
15.	3/4" SW GATE VALVE.
16.	3/4" SW EQUAL CROSS.
17.	WAFER ELEMENT FOR USE WITH 3"ANSI R.F. VALVE.
18.	3"BLIND 300lbs R.F. WELD NECK FLANGE DRILLED FOR 1" SCH. 40/80 PIPE.
19.	3" BLIND FLANGE.
20.	1"NPS SCH. 40/80 (AS PER PROCESS REQUIREMENT) CS PIPE.
21.	1" SW EQUAL TEE.
22.	3/4" x 1/2"SW REDUCING INSERT.
23.	3/4" SW x 3/4" NPT (M) CS/AS NIPPLE
24.	3/4" NPT (F) CS/AS CAP.
25.	1/4" NPS ALLOY STEEL PIPE.
26.	1" x 3/4" SW REDUCING INSERT.
27.	3/4" SW x 1/2" PSW BRANCH TEE.
28.	3/4" PIPE UNION
29.	1/2" CLAMP UNION (THREADED) SUITABLE FOR FLEXIBLE CONNECTION OF NYLON REINFORCED PVC TUBE.
30.	SS TUBE
31.	3/4" SW 4 WAY VALVE.
32.	QUICK DISCONNECT FITTINGS.
33.	1/4" SW ISOLATION VALVE 316SS
34.	1/2" x 1/2" SS PIPE UNION.

एन टी पी सी
NTPC

N T P C LIMITED
(A GOVERNMENT OF INDIA ENTERPRISE)
ENGINEERING DIVISION

PROJECT: TYPICAL THERMAL POWER PROJECT

TITLE: INSTRUMENT INSTALLATION DIAGRAM
DIFF. PRESS.MEASUREMENT (LIQUID, OIL, AIR/GAS SERVICE)

REV.NO.	DESCRIPTION	DRAWN	DESIGN	CHKD.	M	E	C	C&I	ARCH.	APPD	DATE
A	FIRST ISSUE							T.G.			21.08.12

CLEARED BY

SIZE	SCALE	DRG. NO.	REV. NO.
A3	N.T.S.	0000-999-POI-A-030	A

This document is the property of NATIONAL THERMAL POWER CORPORATION LTD.
No part of this document will be reproduced by any means without the written permission.

This document is the property of NATIONAL THERMAL POWER CORPORATION LTD.
No part of this document will be reproduced by any means without the written permission.

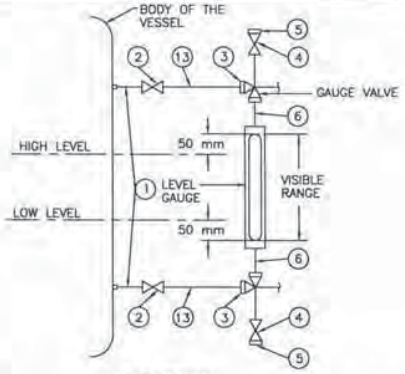

ELEVATION

LOCAL LEVEL INDICATION USING GAUGE GLASS

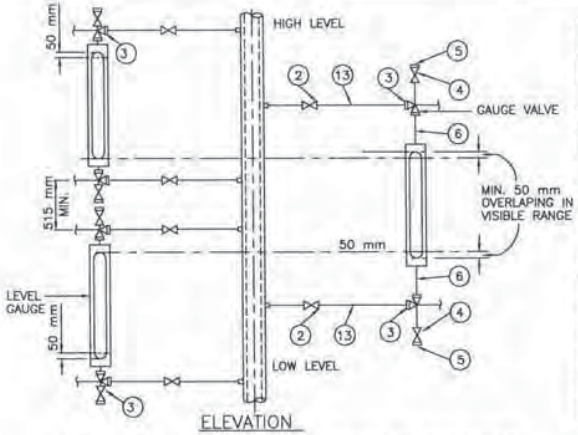

ELEVATION

LOCAL LEVEL INDICATION USING MULTIPLE GAUGES FOR INCREASED RANGE NOT COVERED IN A SINGLE UNIT

LIST OF MATERIALS

ITEM NO.	DESCRIPTION
1.	3/4"/1" NPS SCH.40/80/160/P91 (AS PER PROCESS REQUIREMENT) CARBON /ALLOY STEEL PIPE.
2.	3/4" SW GLOBE VALVE.
3.	3/4" SW UNION.
4.	3/4" NPT GLOBE VALVE.
5.	3/4" NPT (M) CAP.
6.	3/4" NPT (F) UNION CONNECTION.
7.	1" SW EQUAL UNION.
8.	1" x 1/2" SW REDUCING INSERT.
9.	1" SW EQUAL TEE.
10.	1/2" SW GLOBE VALVE.
11.	1/2" NPS SWx1/2" NPT(M) CS/AS NIPPLE.
12.	1/2" NPT (F) CAP
13.	3/4"x1/2" NPS SCH.40/80 CS/AS PIPE.
14.	1/2" NPS SCH.80/160 CS/AS NIPPLE.
15.	1" SW GLOBE VALVE.

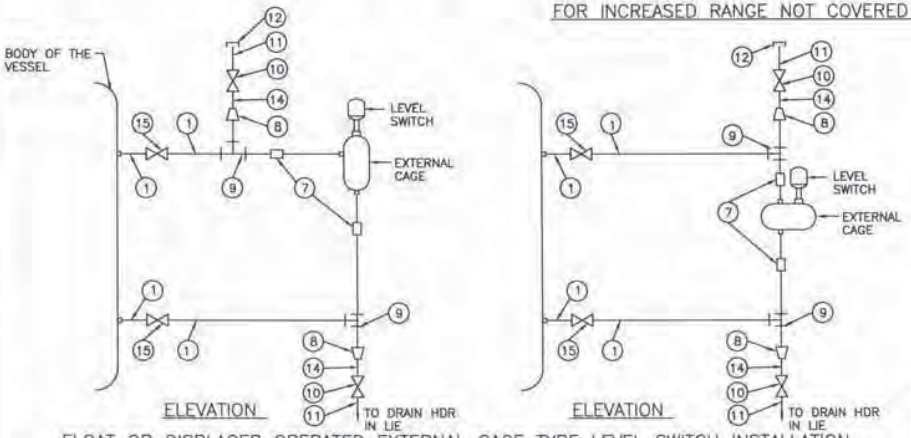

ELEVATION

ELEVATION

FLOAT OR DISPLACER OPERATED EXTERNAL CAGE TYPE LEVEL SWITCH INSTALLATION

NOTES:-

1. FOR LEVEL GAUGE 3/4" AND FOR LEVEL SWITCH 1' PROCESS CONNECTION SHALL BE PROVIDED.
2. NOTES UNDER DRG. NO. 0000-999-POI-A-023 (WHICHEVER ARE RELEVENT).

FOR TENDER PURPOSE ONLY

एन टी पी सी NTPC

N T P C LIMITED
(A GOVERNMENT OF INDIA ENTERPRISE)
ENGINEERING DIVISION

PROJECT: TYPICAL THERMAL POWER PROJECT

TITLE: INSTRUMENT INSTALLATION DIAGRAM (LEVEL GAUGE & SWITCHES)

REV.NO.	DESCRIPTION	DRAWN	DESIGN	CHKD.	M	E	C	C&I	ARCH.	APPD	DATE
A	FIRST ISSUE							T.G.			21.08.12

CLEARED BY

SIZE	SCALE	DRG. NO.	REV. NO.
A3	N.T.S.	0000-999-POI-A-031	A

CLAUSE NO.	TECHNICAL REQUIREMENTS

PROCESS CONNECTION AND PIPING

1.00.00 **PROCESS CONNECTION PIPING**

1.01.00 The Contractor shall provide, install and test all required material for completeness of Impulse Piping System and Air Piping System as per the requirements of this Sub-Section on as required basis for the connection of all instruments and control equipments of entire plant.

1.01.01 **IMPULSE PIPING, TUBING, FITTINGS, VALVES AND VALVE MANIFOLDS**

1.01.02 All impulse pipes shall be of seamless type conforming to ANSI B36.10 for schedule numbers. The size of impulse pipe shall be ½" for Steam & Water Application and ¾" for Air & Flue Gas applications. The rating of material of impulse pipes, tubes, fittings, valves and their installation thereof shall conform to the latest edition of standards as per following table:

Impulse Pipes, Tubes (Material, Rating)	ANSI B31.1, ANSI B31.1a, ANSI/ISA 77.70
Valves (Material, Pr. Class, Size)	ASTM A182/ASTM A105 as per ASME 16.34
Fittings (Size, Rating, Material)	ANSI B31.1, ANSI B31.1a, ASME B16.11-2009
Installation Schemes	BS 6739-2009, ANSI/ISA 77.70

Stainless steel tube shall be provided inside enclosures & racks from tee connection to valve manifold and then to instrument. The source shut-off (primary process root valve) and blow down valve shall be of 1/2 inch size globe valve type for all applications except for air and flue gas service wherein no source shut-off valves are to be provided. Two root valves are to be used wherever pressure is more than 40 Kg/cm^2 or Temp>280 ^{o}C. The end connections of valves shall be of socket welded type. Typical installation scheme of DP Transmitter (inside LIE/LIR) mounted below instrument source point is indicated in Drg. No. 0000-999-POI-A-036. Same scheme with necessary changes shall be applied for other instruments.

1.01.03 The valve manifolds of 316 SS with pressure rating suitable for intended application shall be provided as given below:

Manifold	Application/Measurement
2 Valve	Pressure measurements using pressure transmitters/pressure switches
3 Valve	Pressure measurements using differential pressure transmitter/ switches
5 Valve	Differential Pressure, Flow and Level Measurements

For Pr./D.P gauges, two-way globe/gate valve shall be provided on each impulse line to the instrument in Fluid/Air & Flue Gas applications respectively .

2.00.00 **AIR SUPPLY PIPING**

2.01.01 All pneumatic piping, fittings, valves, air filter cum regulator, purge rotameter and other accessories required for instrument air for the various pneumatic devices/ instruments shall be provided. This will include as a minimum air supply to pneumatically operated control valves, actuators, instruments, continuous and intermittent purging requirements etc.

2.02.00 Instrument air and Service air supply shall be provided for continuous and intermittent purging respectively for all transmitters of mill, dirty air and flue gas applications. Purging Scheme shall be as per Drg. No. 0000-999-POI-A-036.

2.03.00 The Contractor shall also provide SS Tubing and associated fittings (screwed type) of suitable sizes for all pneumatic equipments/actuators (including supply air, signal air and output to actuators) conforming to ANSI 31.1 and 31.3 standard. All other air supply lines shall be of mild steel hot dipped galvanized inside and outside as per IS-1239, heavy duty

CLAUSE NO.	TECHNICAL REQUIREMENTS
	with threaded ends. Fittings for air supply line shall be of forged carbon steel A234 Gr. WPB galvanized inside and outside, screwed as per ASA B2.1. Dimensions of fittings shall be as per ASA B16.11 of rating 3000 lbs. Air supply piping shall be adequately sloped to prevent accumulation of condensed water within the pipe. The air supply headers, sub-headers and branch pipes shall be supported properly by clamps or supports.
2.04.00	The instrument/service air supply to each equipment/devices requiring air supply shall be provided by a well designed air distribution scheme comprising of 2" GI Pipe Header feeding 1" GI Pipe sub-header feeding ½" pipe at each equipment/device. Instrument air filters cum regulator set with mounting accessories shall be provided for each pneumatic device requiring air supply except for Ash Handling System wherein it shall be provided on instrument air header at each location.
2.05.00	All the isolation valves in the air supply line shall be gate valves as per ASTM B62 inside screw rising stem, screwed female ends as per ASA B2.1. Valve bonnet shall be union type & trim material shall be stainless steel, body rating 150 pounds ASA. The valve sizes shall be ½ inch to 2 inch.
2.06.00	Instrument air filters cum regulator set with mounting accessories shall be provided for pneumatic device requiring air supply. The filter regulators shall be suitable for 10-kg/ sq.cm max. Inlet pressure. The filter shall be of size 5 microns and of material sintered bronze. The air set shall have 2-inch size pressure gauge and built in filter housing blowdown valve. The end connection shall be as per the requirement to be finalized during detailed engineering.
3.00.00	**INSTALLATION AND ROUTING**
3.01.01	All instrument piping, tubing and its accessories shall be supported in a safe manner to prevent excessive vibrations and anchored sufficiently to prevent undue strain on connected equipment. Impulse piping shall be supported at an interval not exceeding 1.5 meters. The slope of the impulse pipe form the process connection to the instrument shall be as per ANSI/ISA 77.70 latest edition and BS 6739-2009. All impulse piping shall be installed to permit free movement due to thermal expansion. Wherever required expansion loops shall be provided. Condensate pots shall be provided for all level measurements in steam and water services, all flow measurement in steam services and for flow measurements in water services above 120 Deg. C. Colour coding of all impulse pipes shall be done by the Contractor in line with the colour coding being followed for the parent pipes.
4.00.00	**SHOP AND SITE TESTS**
4.01.01	The equipment and work performed as per this Sub-section shall be subject to shop and site test as per requirements of Sub-section-IIIE-04 (Quality Assurance & Inspection) other applicable clauses of this Sub-section and Employer approved quality assurance plan.
4.01.02	Hydrostatic and Pneumatic leakage tests shall be performed on all pipes, tubing and systems and shall conform to ANSI B31.1.
5.00.00	**LOCAL INSTRUMENT ENCLOSURE AND RACKS**
	All transmitters, switches etc. for FGD system and other system being provided under the contract shall be suitably grouped together and mounted inside (i) local instruments enclosures in case of open areas of the plant and (ii) In local instrument racks in case of covered areas. The GA of LIE with purging indicated in the Drg. No. 0000-999-POI-A-036 is to be followed by contractor. The GA of LIR shall be similar to LIE except for front/rear doors and side panels.

CLAUSE NO.	TECHNICAL REQUIREMENTS
	The internal layout shall be such that the impulse piping/ blow down lines are accessible from back side of the enclosure / rack and the transmitters etc. are accessible from front side for easy maintenance. Bulkheads, especially designed to provide isolation from process line vibration shall be installed on instrument enclosures/racks to meet the process sensing line connection requirement. Vibration dampeners shall be installed for each enclosure / rack. The Degree of Protection of LIE and JB of LIE/LIR shall be IP-55. The enclosures shall be constructed of 3 mm sheet plate and shall be of modular construction with one or more modules and two end assemblies bolted together to form an enclosure. Double inter locking doors shall be provided. The doors shall be the three-point locking type constructed of not less than 1.6 mm thick steel. Doors shall have concealed quick removal type pinned hinges and locking handles. Door locks shall accept the same key. The instrument racks shall be free standing type constructed of suitable 5 mm thick channel frame of steel and shall be provided with a canopy to protect the equipment mounted in racks from falling objects, water etc. The canopy shall not be less than 3 mm thick steel, and extended beyond the ends of the rack. Enclosures/Racks shall be reinforced as required to ensure true surface and to provide adequate support for instruments and equipment mounted therein. Centre posts or any member which would reduce access shall not be provided. Contractor shall provide not more than three variants for LIE/LIR with respect to max. no. transmitters mounted in each LIE/LIR.
5.01.00	ENCLOSURE / RACKS FOR DUAL I/P TEMPERATURE TRANSMITTERS All Dual Input temperature transmitters for FGD system and other system being provided under the contract shall be suitably grouped together and mounted inside (i) Enclosures in case of open areas of the plant and (ii) Racks in case of covered areas. Integral JB shall be provided with each Enclosure and Rack. The internal layout shall be such that the transmitters are accessible from both front and back side of the enclosure / rack for easy maintenance. Enclosure/ Racks shall be of robust and rugged design. Vibration dampeners shall be installed for each enclosure / rack. The Degree of Protection of Enclosure and JB shall be IP-55. Enclosure and Racks shall be free standing type. Enclosures/Racks shall be reinforced as required to ensure true surface and to provide adequate support for instruments and equipment mounted therein. Contractor shall provide not more than five variants for Enclosure/ Rack with respect to max. no. transmitters mounted in each Enclosure/ Rack. However, the maximum number of Transmitters that can be grouped in one Enclosure/ Rack shall be decided during detail Engineering.

CLAUSE NO.	TECHNICAL REQUIREMENTS
6.00.00	**INSTALLATION OF OTHER INSTRUMENTS:** For installation and routing of other field mounted instruments which are not covered in Cl. No. 5.00.00, please refer Cl. No 52.04.00(J) of Section-VI, Part-D, Erection Conditions of Contract (ECC) of Technical Specifications.

	C&I SPECIFICATION FOR LIME DOSING SYSTEM	SECTION: C SUB SECTION: C&I

SIGNAL INTERFACE BETWEEN DRIVES AND DCS

DDCMIS INTERFACE WITH LT MCC (LT)

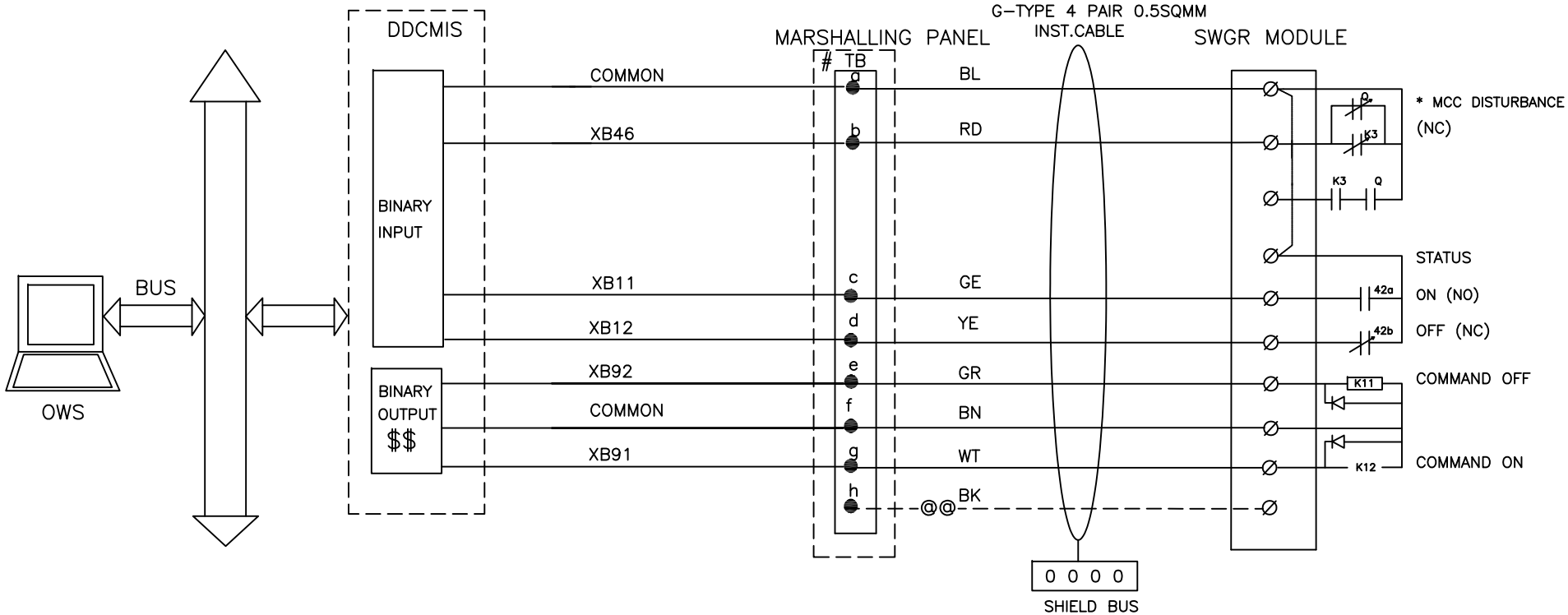

DDCMIS INTERFACE WITH BID

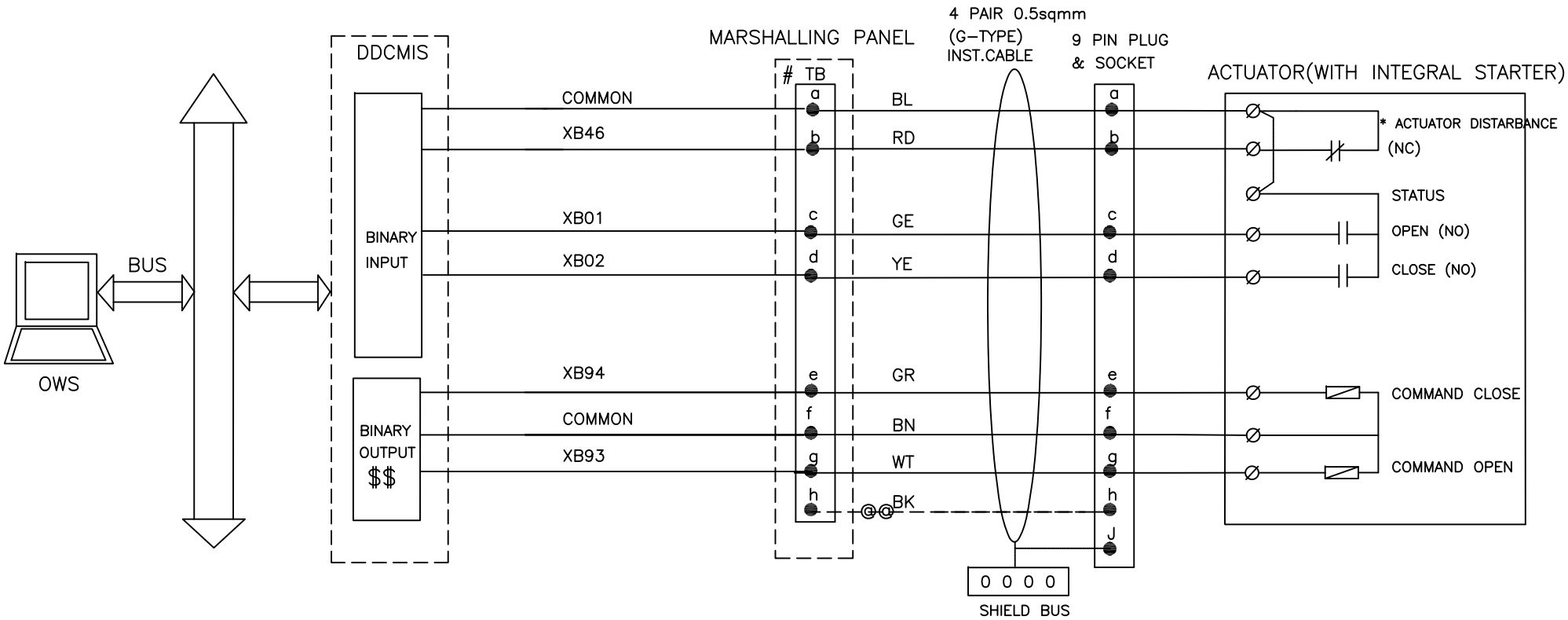

DDCMIS INTERFACE WITH DUAL COIL SOLENOID (DSOV/L)

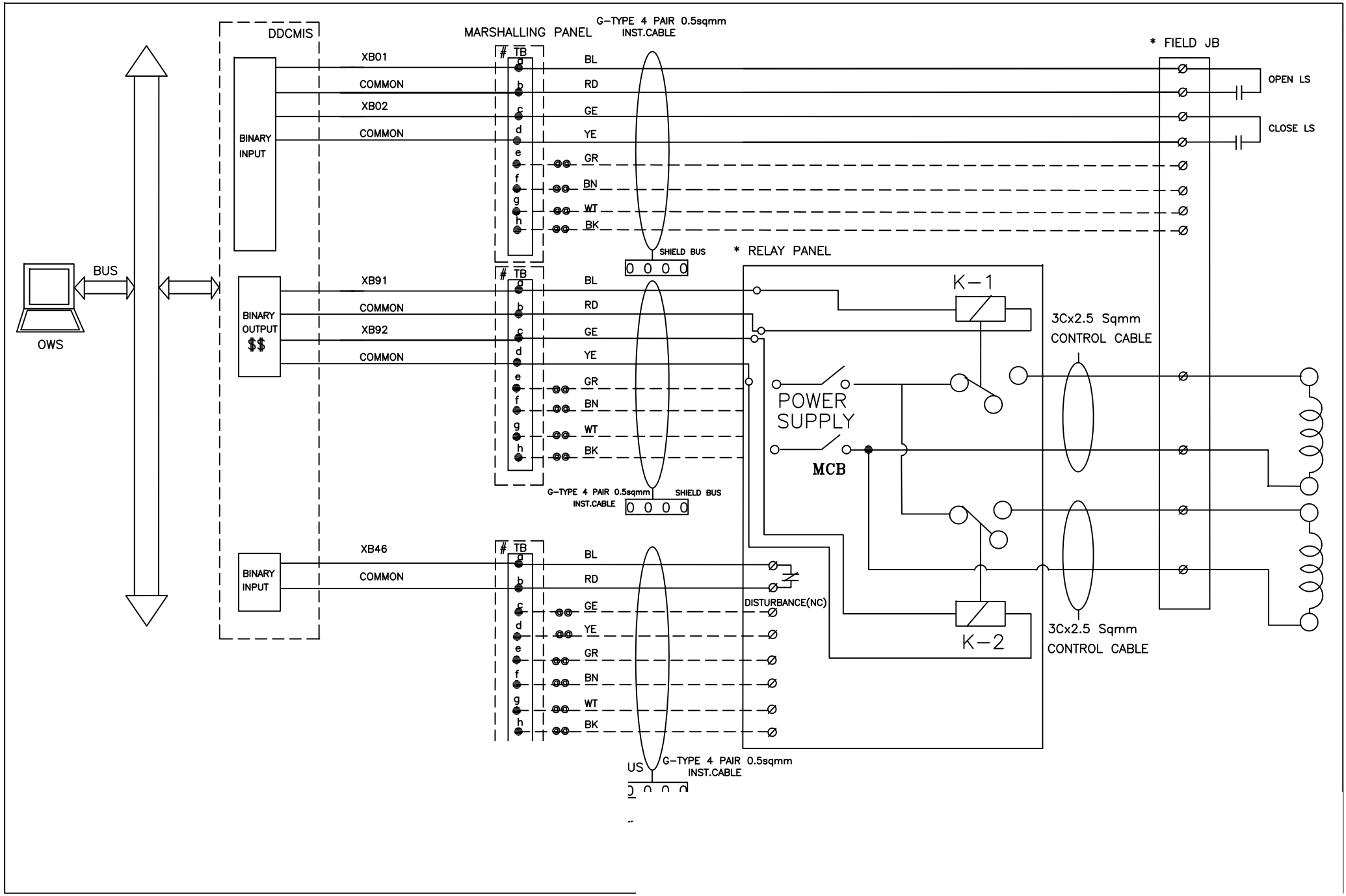

INTERFACE FOR MODULATING DRIVES – CLCS

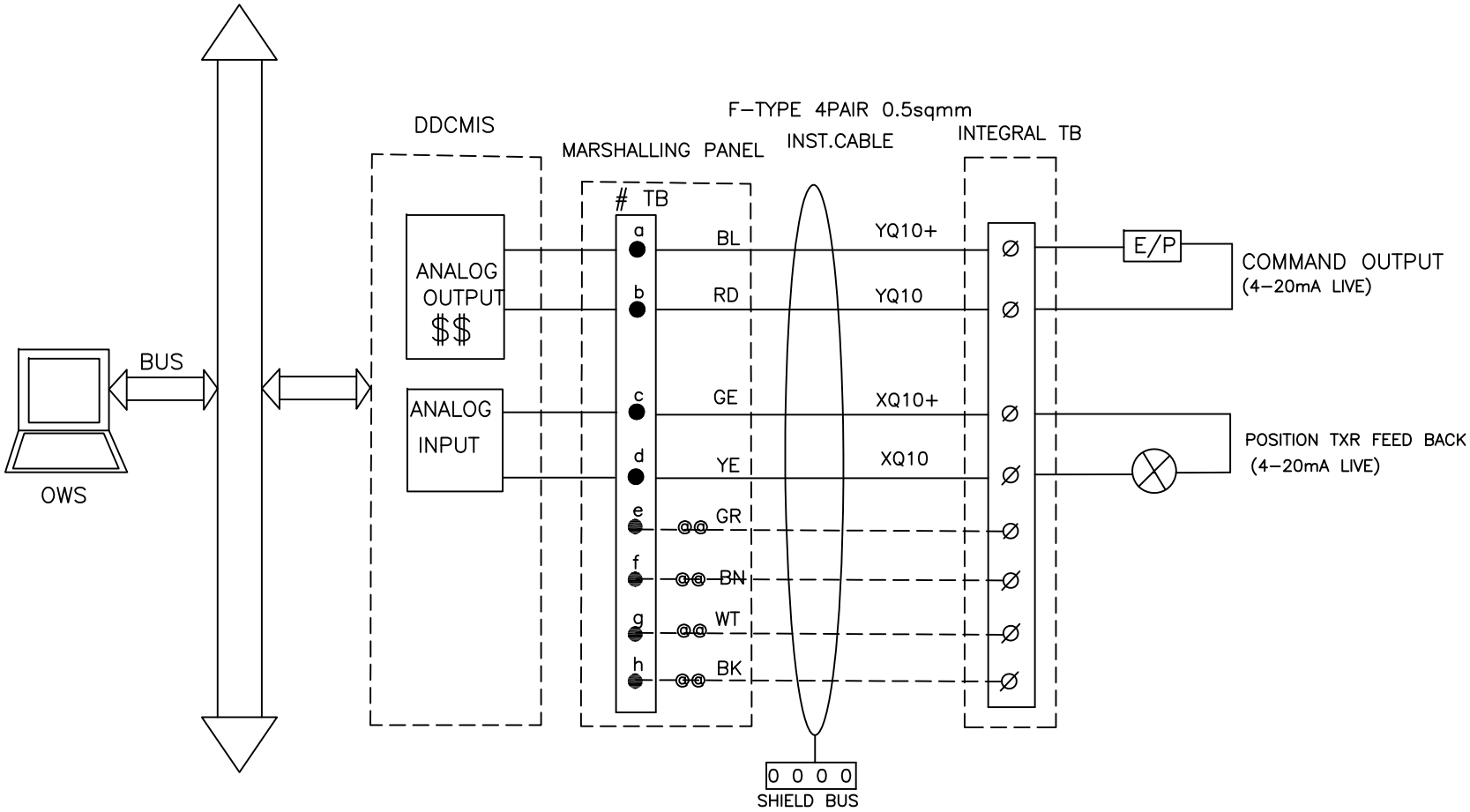

INTERFACE FOR MODULATING DRIVES – CLCS–M

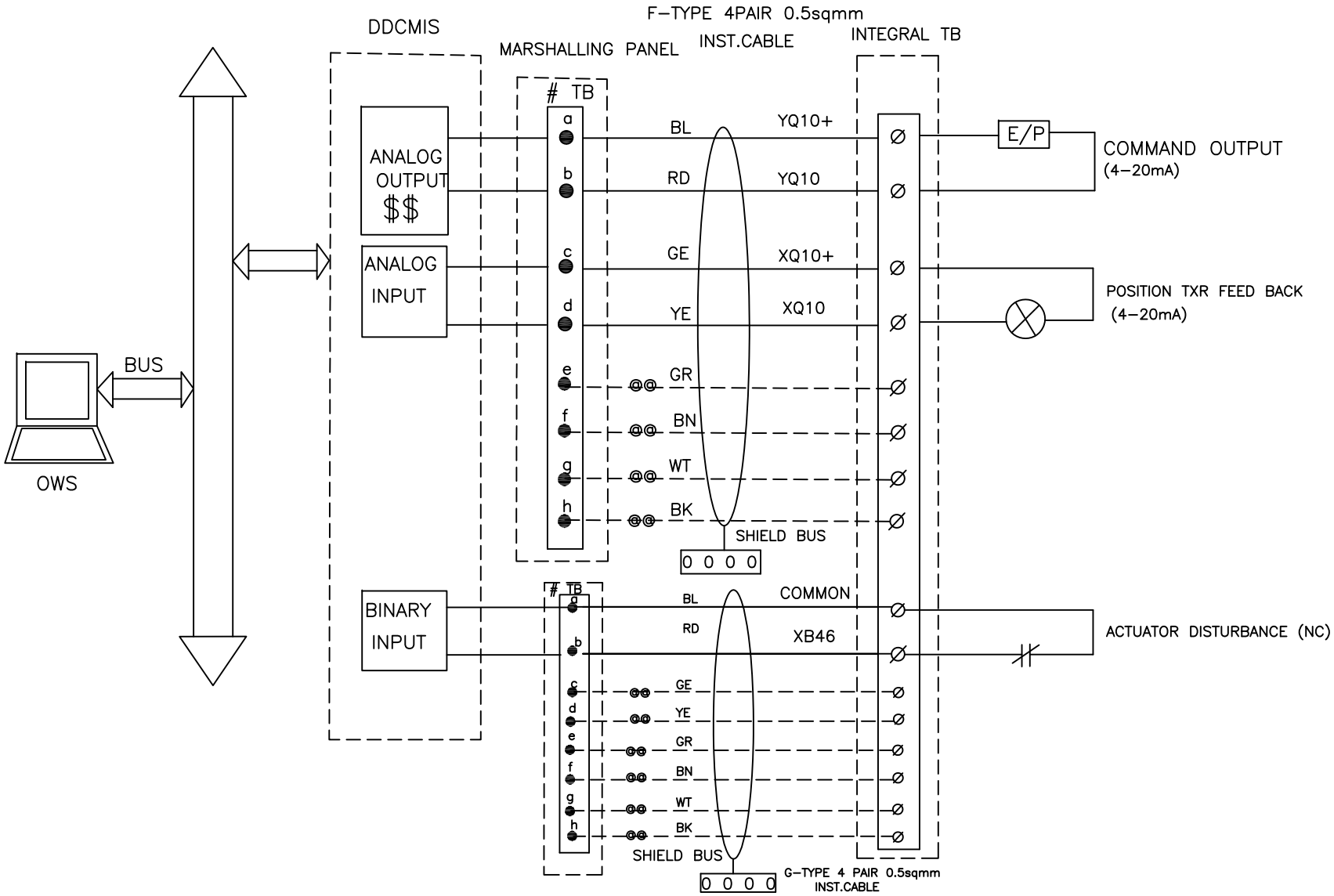

	C&I SPECIFICATION FOR LIME DOSING SYSTEM	SECTION: C SUB SECTION: C&I

DRIVE & INSTRUMENT INTERFACE DIAGRAM

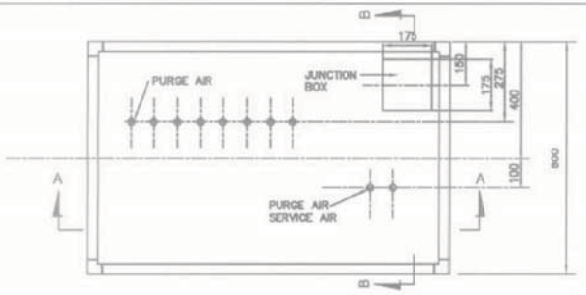

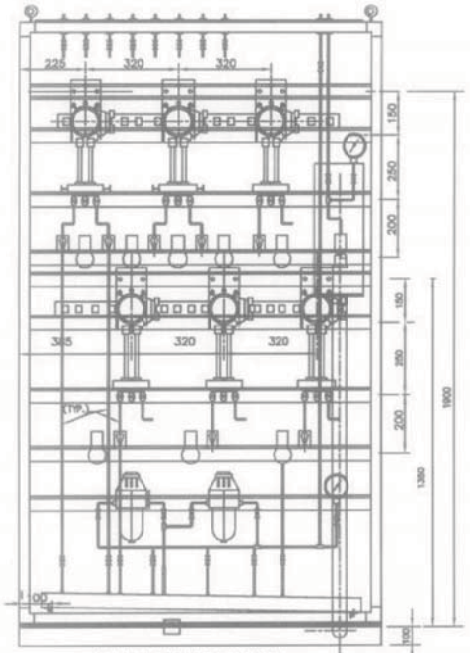

LIE WITH PURGING (TYPICAL)

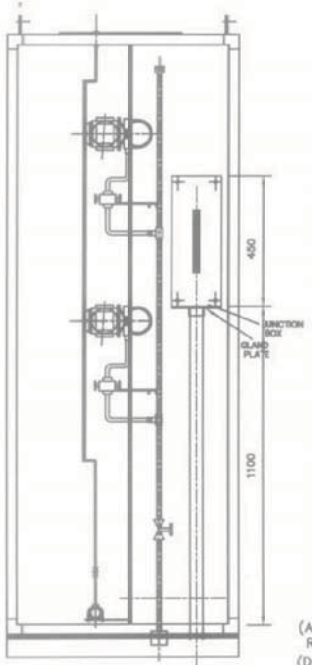

SECTION-BB

LIST OF MATERIALS

ITEM NO.	DESCRIPTION
1.	ISOLATION VALVE(gate/globe). SS.
2.	SEAMLESS SS PIPE.
3.	AIR FILTER REGULATOR.
6.	INST. AIR HEADER SS.
10.	COMP. NEEDLE VALVE SS.
11.	AIR PURGE SET.
12.	COMP VALVE SS.
13.	PLUG SS.
15.	TUBE SS CONNECTOR.
16.	TUBE COMP. EQUAL TEE UNION.
24.	BULKHEAD–SS SUITABLE FOR GI PIPE CONNECTION
25.	SEAMLESS TUBE SS.
27.	BRANCH TEE SS.
28.	PR. GAUGE.
30.	NYLON FLEX. HOSE BRAIDED WITH SS WIRE.
31.	HOSE BARBED CONN. SS.
33.	QUICK DISCONNECT SS (PURGE AIR CONNECTION TO INSTRUMENT SOURCE END).

LIST OF MATERIALS

ITEM NO.	DESCRIPTION
14.	SW GLOBE VALVE.
17.	SW EQUAL TEE
18.	S.S. NIPPLE
19.	5 VALVE MANIFOLD
20.	SW HALF COUPLET CS
21.	PIPE x TUBE UNION
22.	SUITABLE ADAPTER
23.	SS TUBE

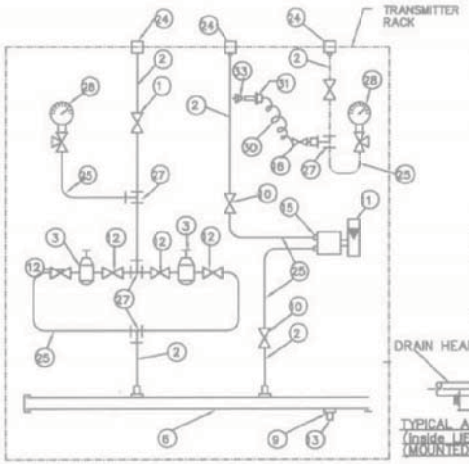

TYPICAL PURGE AIR CONNECTION INSIDE THE INST. ENCLOSURE
(APPLICABLE FOR MILL, AIR & FLUE GAS SERVICE INSTRUMENTS REQUIRING PURGE AIR)
(Drain Header of each LIE/LIR shall be connected to nearest plant drain)

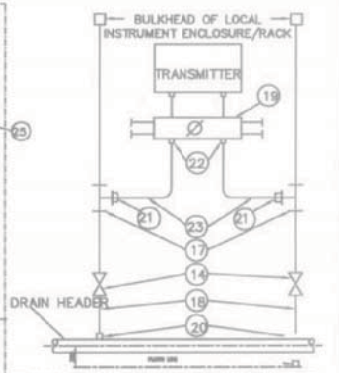

TYPICAL ARRANGEMENT OF DP TRANSMITTER (Inside LIE/LIR) (MOUNTED BELOW INSTRUMENT SOURCE POINT)

FOR TENDER PURPOSE ONLY

NTPC — N T P C LIMITED (A GOVERNMENT OF INDIA ENTERPRISE) ENGINEERING DIVISION

PROJECT: TYPICAL THERMAL POWER PROJECT (TURNKEY EPC PACKAGE)

TITLE: TYPICAL GA OF LOCAL INSTRUMENT ENCLOSURE, PURGING SCHEME, DP TRANSMITTER

REV. NO.	DESCRIPTION	DRAWN	DESIGN	CHKD.	M	E	C	CIM	ARCH.	APPD	DATE
A	FIRST ISSUE										02.02.11

CLEARED BY

SIZE	SCALE	DRG. NO.	REV. NO.
A3	N.T.S.	0000-999-POI-A-036	A

This document is the property of NATIONAL THERMAL POWER CORPORATION LTD. No part of this document will be reproduced by any means without the written permission.

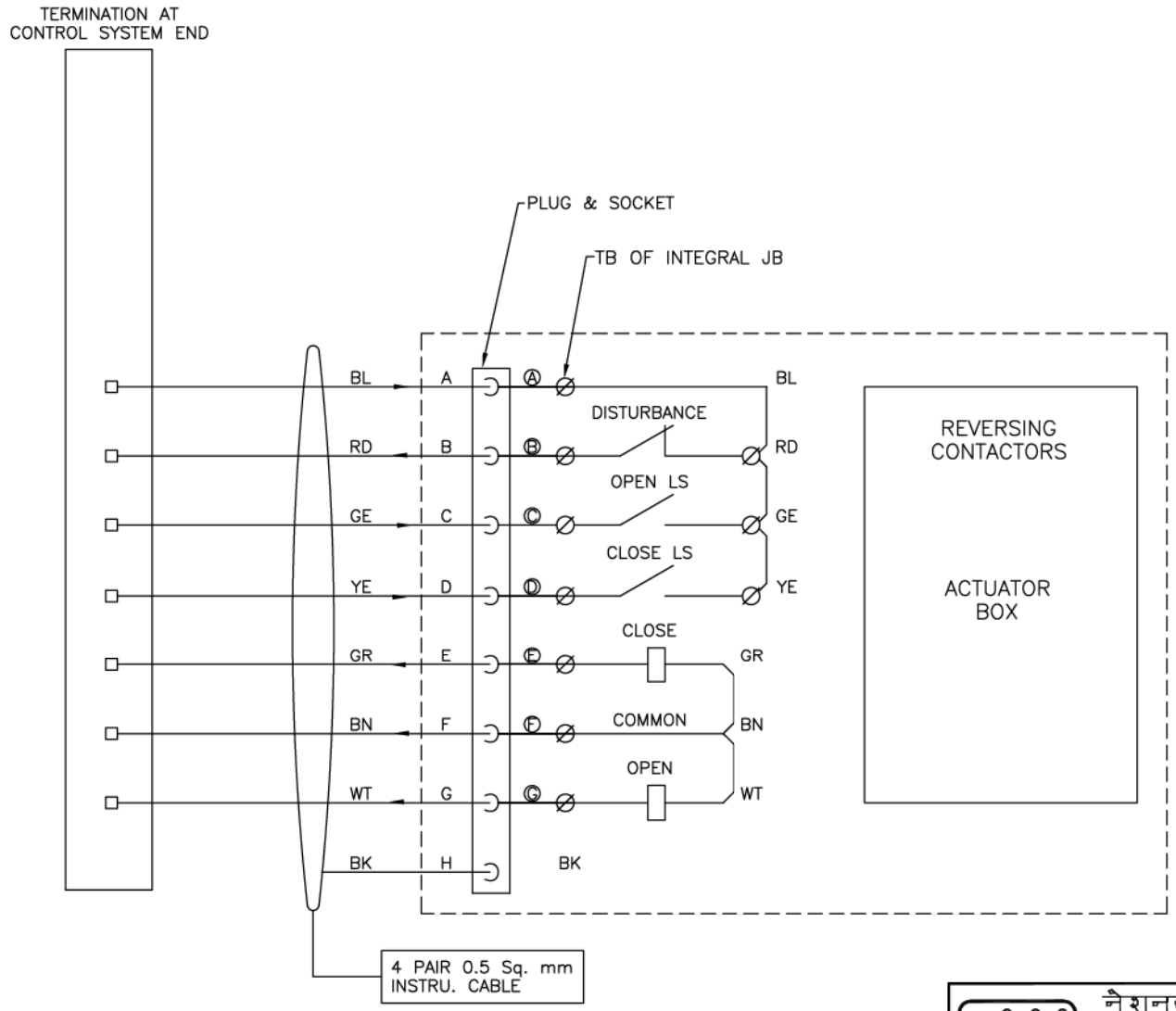

FOR TENDER PURPOSE ONLY

नैशनल थर्मल पावर कारपोरेशन लिमिटेड
एन टी पी सी NTPC
National Thermal Power Corporation Ltd.
(A GOVERNMENT OF INDIA ENTERPRISE)
ENGINEERING DIVISION

PROJECT: TYPICAL THERMAL POWER PROJECT

TITLE: INTERFACING OF ACTUATORS

REV.NO.	DESCRIPTION	DRAWN	DESIGN	CHKD.	M	E	C	C&I	ARCH.	APPD	DATE
D	FIRST ISSUE										21.08.12

CLEARED BY

SIZE	SCALE	DRG. NO.	REV. NO.
A3	N.T.S.	0000-999-POI-A-063	D

This document is the property of NATIONAL THERMAL POWER CORPORATION LTD.
No part of this document will be reproduced by any means without the written permission.

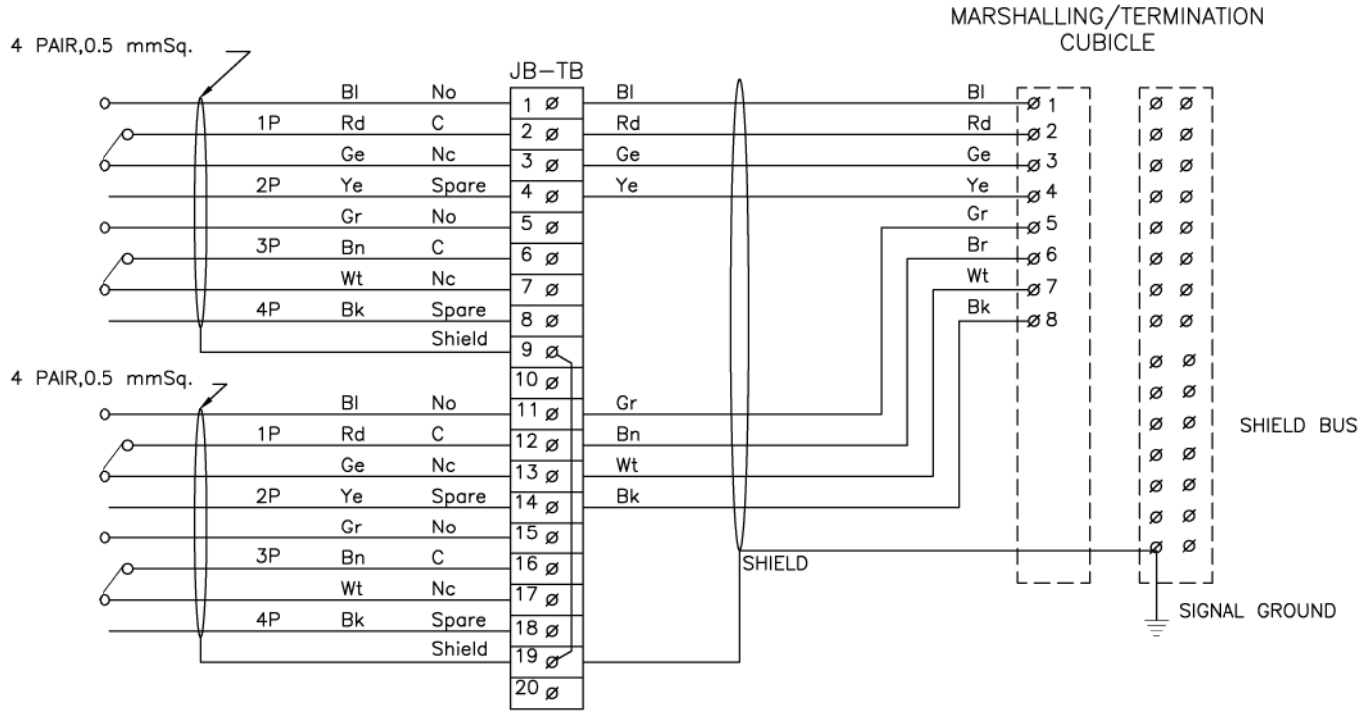

FOR TENDER PURPOSE ONLY

एन टी पी सी
NTPC

N T P C LIMITED
(A GOVERNMENT OF INDIA ENTERPRISE)
ENGINEERING DIVISION

PROJECT: TYPICAL THERMAL POWER PROJECT

TITLE: INTERFACING OF FIELD INSTRUMENTS/ SWGR SWITCH (COC) TERMINATION DETAILS

REV.NO.	DESCRIPTION	DRAWN	DESIGN	CHKD.	M	E	C	C&I	ARCH.	APPD	DATE
A	FIRST ISSUE										21.08.12

CLEARED BY

SIZE	SCALE	DRG. NO.	REV. NO.
A3	NTS	0000-999-POI-A-065 SH 01 OF 15	A

This document is the property of NATIONAL THERMAL POWER CORPORATION LTD.
No part of this document will be reproduced by any means without the written permission.

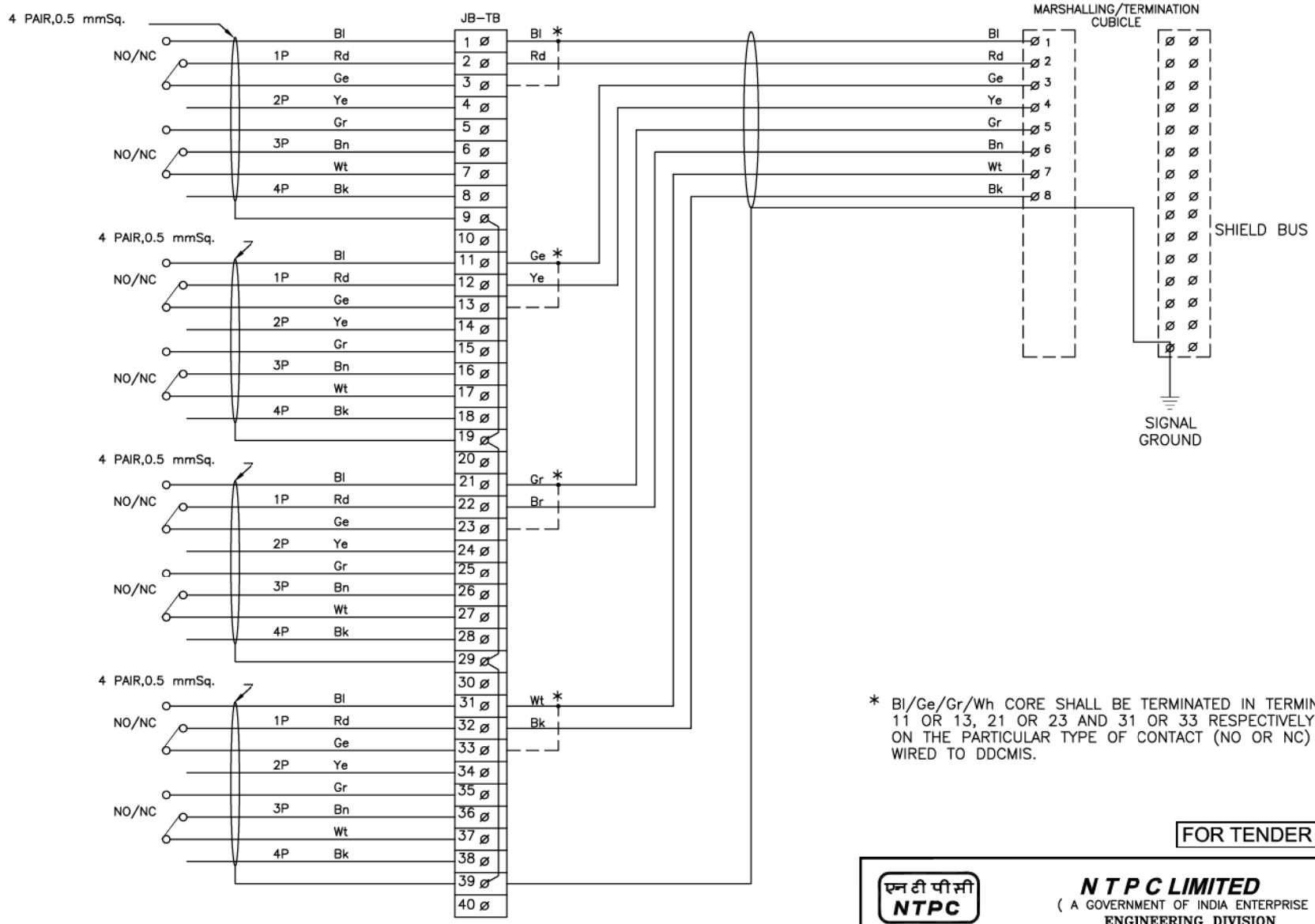

* Bl/Ge/Gr/Wh CORE SHALL BE TERMINATED IN TERMINAL 1 OR 3, 11 OR 13, 21 OR 23 AND 31 OR 33 RESPECTIVELY DEPENDING ON THE PARTICULAR TYPE OF CONTACT (NO OR NC) IS TO BE WIRED TO DDCMIS.

FOR TENDER PURPOSE ONLY

एन टी पी सी NTPC

N T P C LIMITED
(A GOVERNMENT OF INDIA ENTERPRISE)
ENGINEERING DIVISION

PROJECT: TYPICAL THERMAL POWER PROJECT

TITLE: INTERFACING OF FIELD INSTRUMENTS SWITCH TERMINATION DETAILS NO/NC

REV.NO.	DESCRIPTION	DRAWN	DESIGN	CHKD.	M	E	C	C&I	ARCH.	APPD	DATE
A	FIRST ISSUE										21.08.12

CLEARED BY

SIZE	SCALE	DRG. NO.	REV. NO.
A3	NTS	0000-999-POI-A-065 SH 02 OF 15	A

This document is the property of NATIONAL THERMAL POWER CORPORATION LTD.
No part of this document will be reproduced by any means without the written permission.

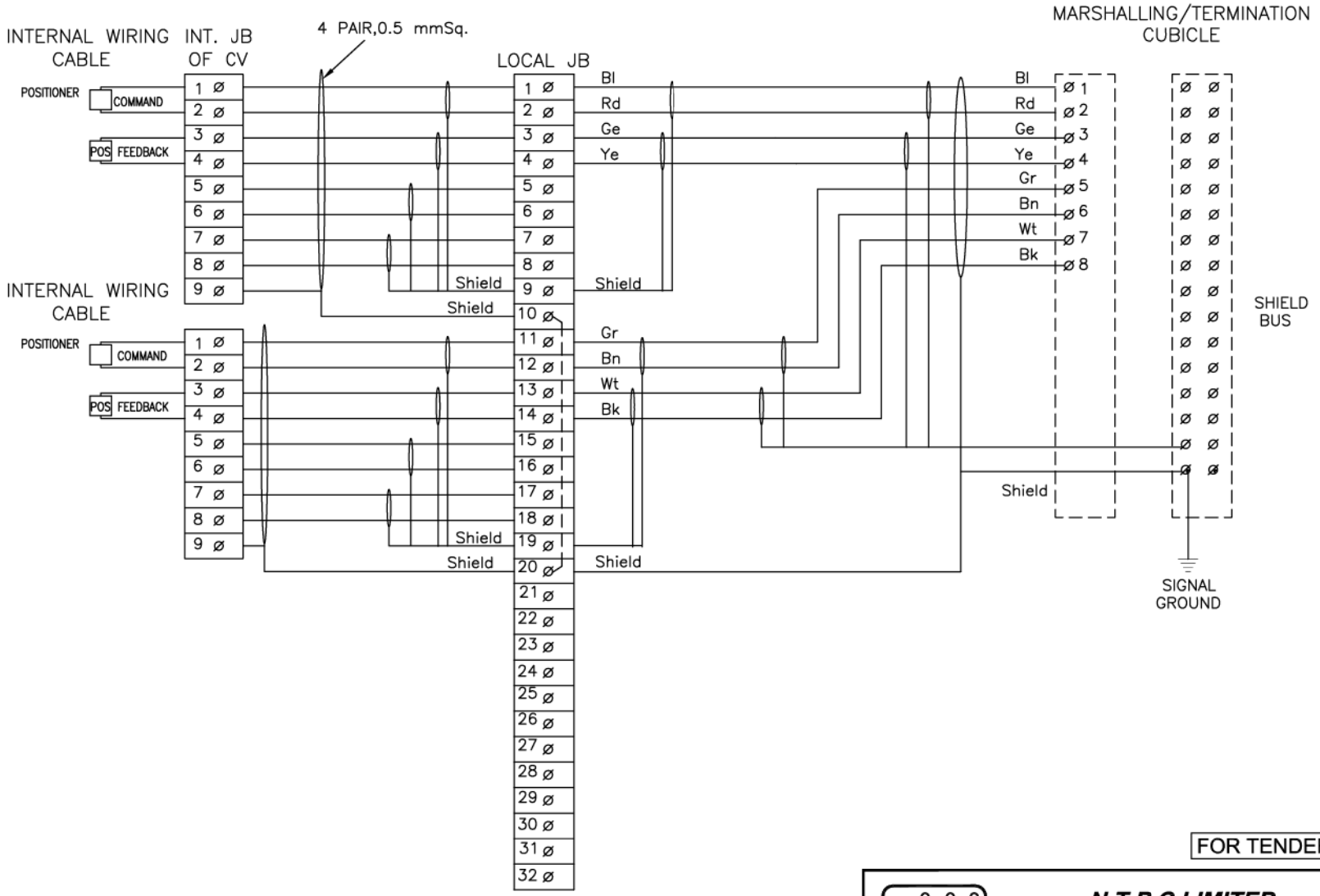

FOR TENDER PURPOSE ONLY

This document is the property of NATIONAL THERMAL POWER CORPORATION LTD.
No part of this document will be reproduced by any means without the written permission.

एन टी पी सी NTPC

N T P C LIMITED
(A GOVERNMENT OF INDIA ENTERPRISE)
ENGINEERING DIVISION

PROJECT: TYPICAL THERMAL POWER PROJECT

TITLE: INTERFACING OF FIELD INSTRUMENTS CONTROL VALVE

REV.NO.	DESCRIPTION	DRAWN	DESIGN	CHKD.	M	E	C	C&I	ARCH.	APPD	DATE
A	FIRST ISSUE										21.08.12

CLEARED BY

SIZE	SCALE	DRG. NO.	REV. NO.
A3	NTS	0000-999-POI-A-065 SH 03 OF 15	A

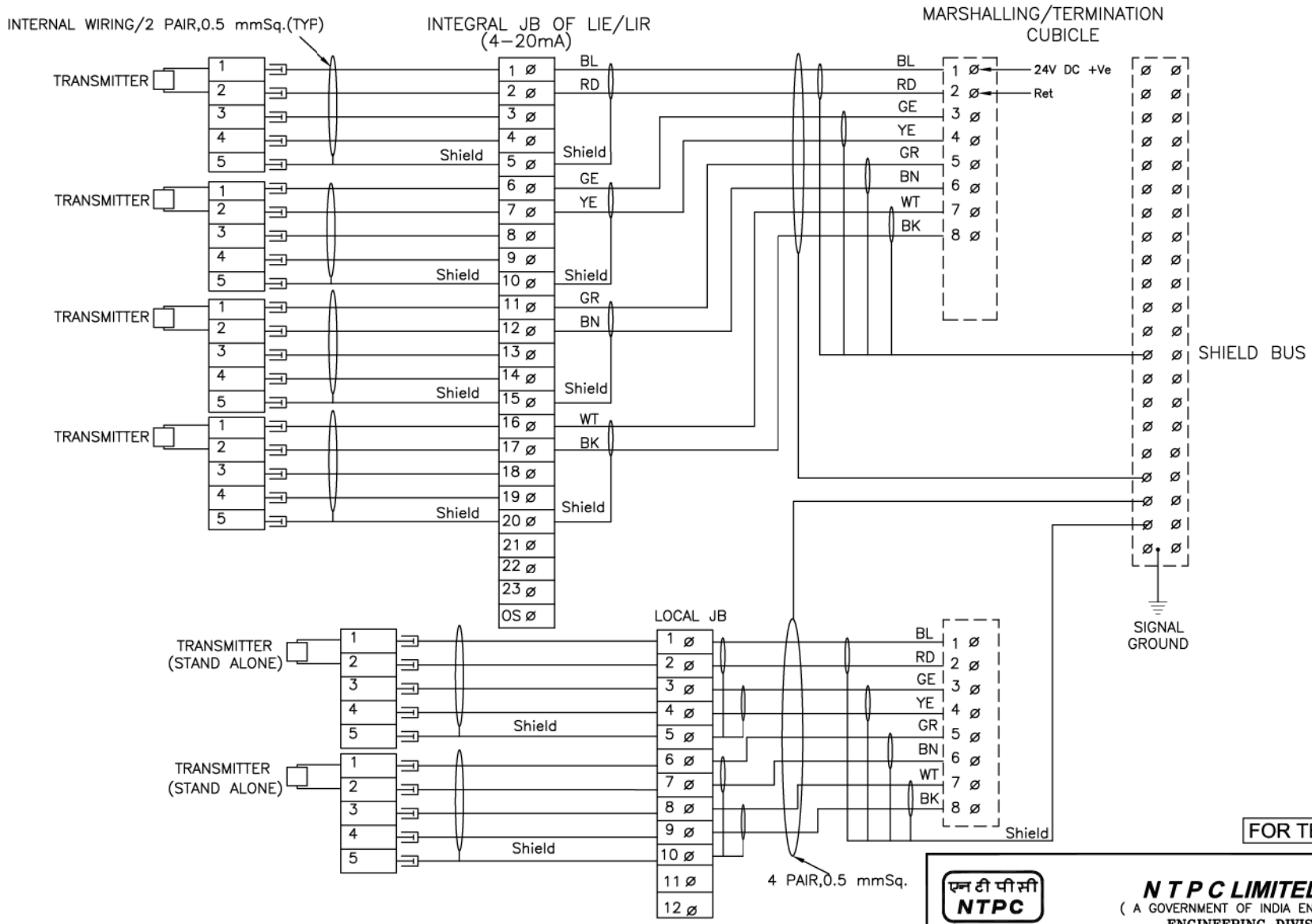

FOR TENDER PURPOSE ONLY

This document is the property of NATIONAL THERMAL POWER CORPORATION LTD.
No part of this document will be reproduced by any means without the written permission.

एन टी पी सी NTPC

N T P C LIMITED
(A GOVERNMENT OF INDIA ENTERPRISE)
ENGINEERING DIVISION

PROJECT: TYPICAL THERMAL POWER PROJECT

TITLE: INTERFACING OF FIELD INSTRUMENTS 4-20mA

REV.NO.	DESCRIPTION	DRAWN	DESIGN	CHKD.	M	E	C	C&I	ARCH.	APPD	DATE
B	INTERNAL WIRING FOR LIE/LIR MOUNTED SHOWN WIRING OF STAND ALONE TXTR SHOWN										21.08.12
A	FIRST ISSUE										12.1.05

CLEARED BY

SIZE	SCALE	DRG. NO.	REV. NO.
A3	NTS	0000-999-POI-A-065 SH 04 OF 15	B

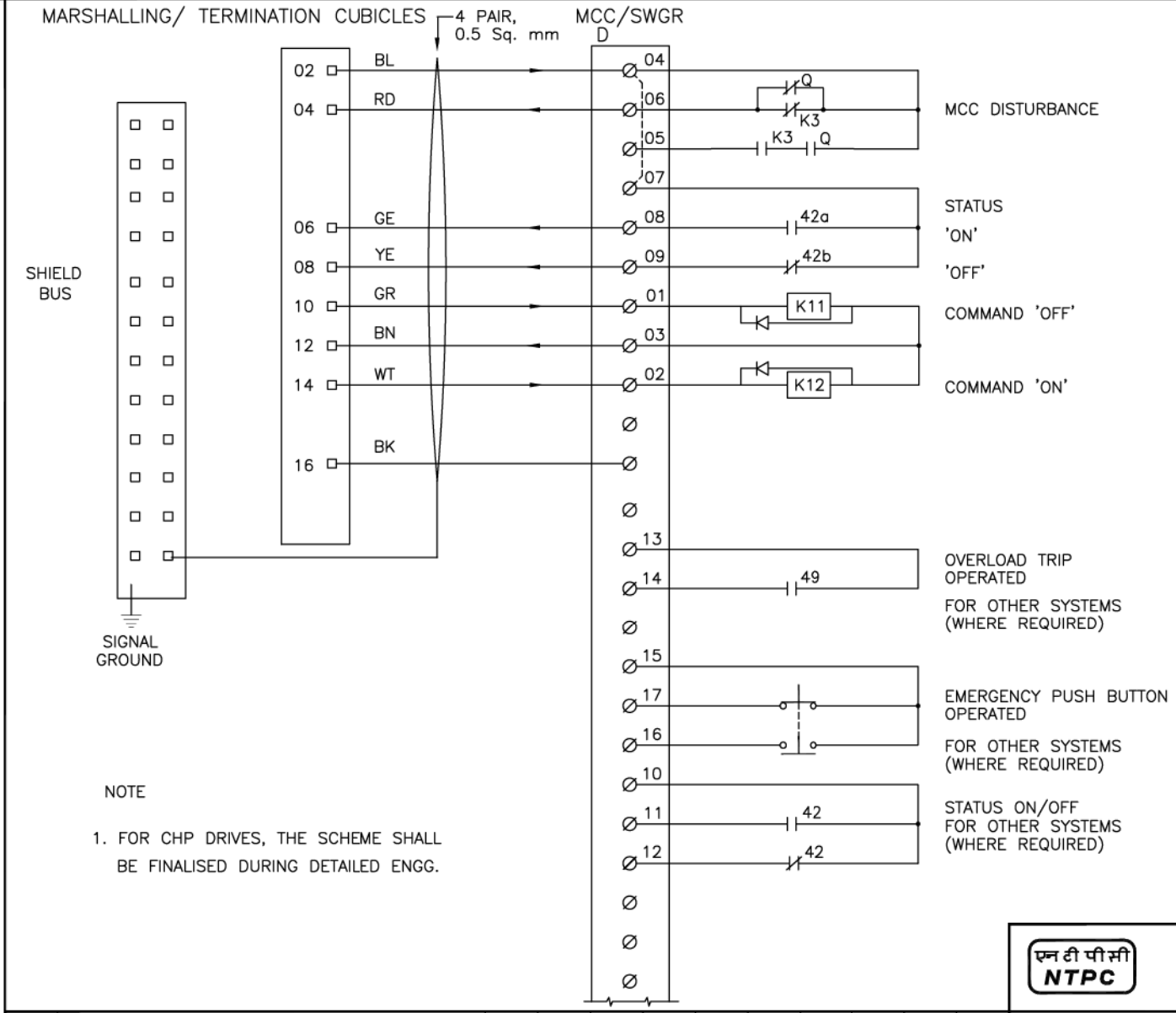

NOTE

1. FOR CHP DRIVES, THE SCHEME SHALL BE FINALISED DURING DETAILED ENGG.

FOR TENDER PURPOSE ONLY

एन टी पी सी NTPC

N T P C LIMITED
(A GOVERNMENT OF INDIA ENTERPRISE)
ENGINEERING DIVISION

PROJECT: TYPICAL THERMAL POWER PROJECT

TITLE: INTERFACING OF FIELD INSTRUMENTS
INTERFACE OF DDCMIS WITH MCC/SWGR/ACTUATOR
(LT MOTORS)

REV.NO.	DESCRIPTION	DRAWN	DESIGN	CHKD.	M	E	C	C&I	ARCH.	APPD	DATE
A	FIRST ISSUE										21.08.12

CLEARED BY

SIZE	SCALE	DRG. NO.	REV. NO.
A3	NTS	0000-999-POI-A-065 SH 05 OF 15	A

This document is the property of NATIONAL THERMAL POWER CORPORATION LTD.
No part of this document will be reproduced by any means without the written permission.

	C&I SPECIFICATION FOR LIME DOSING SYSTEM	SECTION: C SUB SECTION: C&I

QUALITY ASSURANCE FOR INSTRUMENTS & LCP AND TYPE TEST REQUIREMENTS

MEASURING INSTRUMENTS (PRIMARY AND SECONDARY)

TESTS / ITEMS	Dimensions (R)	Make, Model, Type, Rating (R)	Process / Electrical connection (R)	Calibration (R)	Test as per standard(R)	Insulation Resistance (R)	IBR Certification (if applicable)(R)	Hydro Test(R)	Material Test certificate ®
1. PR Gauge (IS-3624)	Y	Y	Y	Y	Y				
2. Temp. Gauge (BS-5235)	Y	Y	Y	Y	Y				
3. Pr./D.P.Switch(BS-6134)	Y	Y	Y	Y	Y	Y			
4. Electronic Transmitter(IEC-60770)	Y	Y	Y	Y	Y	Y			
5. Temp. Switch	Y	Y	Y	Y	Y	Y			
6. Recorder(IS-9319/ANSI C-39.4)	Y	Y	Y	Y	Y	Y			
7. Vertical indicators	Y	Y	Y	Y		Y			
8. Digital Indicators	Y	Y	Y	Y		Y			
9. Integrators	Y	Y	Y	Y					
10. Electrical Metering Instrument (IS-1248)	Y	Y	Y	Y	Y	Y			
11. Transducer (IEC-688)	Y	Y	Y	Y	Y	Y			
12. Thermocouples (IEC – 754 / ANSI-MC-96.1)	Y	Y	Y	Y	Y	Y			
13. RTD(IEC-751)	Y	Y	Y	Y	Y	Y			
14. Thermowell	Y		Y				Y	Y	Y

R-Routine Test A- Acceptance Test Y – Test applicable

: Note: **1) Detailed procedure of Environmental Stress Screening shall be as per Quality Assurance Programme in General Technical Conditions. Requirement of test and procedure (if required) finalized during QP finalization**

2) This is an indicative list of tests/checks. The manufacturer is to furnish a detailed quality plan indicating the Practices and Procedure adopted along with relevant supporting documents.

MEASURING INSTRUMENTS (PRIMARY AND SECONDARY)

TESTS / ITEMS	Dimensions (R)	Make, Model, Type, Rating (R)	Process / Electrical connection (R)	Calibration (R)	Requirement as per standard (R)	WPS approval (A)	Non-destructive testing (R)	Calculation for accuracy (R)	Insulation Resistance (R)	IBR Certification as applicable (R)	Hydro test (R)	Material test certificate (A)
15. Cold junction compensation box	Y	Y	Y	Y					Y			
16. Orifice plate(BS-1042)	Y	Y	Y	Y *	Y	Y **	Y **			Y	Y **	Y
17. Flow nozzle(BS-1042)	Y	Y	Y	Y *	Y	Y	Y			Y	Y	Y
18. Impact head type element	Y	Y	Y					Y				Y
19. Level transmitter/float type switch	Y	Y	Y	Y					Y	Y	Y	Y
20. Analysers	Y	Y	Y	Y								
21. Dust emission monitors	Y	Y	Y	Y								
*Calibration to be carried out on one flow element of each type and size if calibration carried out as type test same shall not be repeated.												
** If applicable												

R-Routine Test A- Acceptance Test Y – Test applicable

Note: 1) Detailed procedure of Environmental Stress screening test shall be as per Quality Assurance Programme in General Technical Conditions. Requirement of test and procedure (if required) finalized during QP finalization

2) This is an indicative list of tests/checks. The manufacturer is to furnish a detailed quality plan indicating the Practices and Procedure adopted along with relevant supporting documents.

CLAUSE NO.	QUALITY ASSURANCE & INSPECTION	एनटीपीसी NTPC

Process, Connection & piping FOR C&I SYSTEMS

TESTS / ITEMS	Visual ®	GA, BOM, Layout of component & construction feature®	Dimension ®	Paint Shade/thickness ®	Flattening, flaring, hydrotest, hardness check as per ASTM standard	Component Ratings ®	Wiring ®	Make, Model, Type, Rating®	IR & HV ®	Review of TC for instrument/devices (R)	Accessability of TBs/Devices ®	Illumination,grounding ®	Tubing ®	Leak/Hydro test(A)	Chemical/physical properties of material (A)	Proof pressure test,Dismantling & reassembly test,Hydrulic impulse and vibration test (R)	Tests as per standards & specification
Local Instrument enclosure	Y	Y	Y	Y		Y	Y	Y	Y	Y	Y	Y	Y	Y			
Local instruments racks	Y	Y	Y	Y		Y	Y	Y	Y	Y	Y	Y	Y	Y			
Junction Box	Y	Y	Y	Y *		Y		Y	Y								
Gauge Board	Y	Y	Y	Y		Y		Y		Y			Y	Y			
Impulse pipes and tubes	Y		Y		Y			Y							Y		
Socket weld fittings ANSI B-16.11	Y		Y					Y							Y		Y
Compression fittings	Y		Y					Y						Y	Y	Y	
Instrument valves & Valve manifolds	Y		Y					Y						Y	Y		
Copper tubings ASTM B75	Y							Y									Y

*-applicable for painted junction boxes.

Note: R-Routine Test A- Acceptance Test Y – Test applicable

Note: This is an indicative list of tests/checks. The manufacturer is to furnish a detailed quality plan indicating the Practices and Procedure adopted alongwith relevant supporting documents.

CLAUSE NO.	QUALITY ASSURANCE & INSPECTION	एनटीपीसी NTPC

INSTRUMENTATION CABLE

TESTS / ITEMS	Conductor Resistance ® & (A)	High Voltage ® & (A)	Insulation Resistance ® & (A)	Constructional detail, dimensions (A)	Outer-Sheathe/core marking, end sealing (A)	Thermal Stability (A) +	Visual, Surface finish (A) +	Electrical Parameters ** (A) +	Persulphate Test (A) +	Overall/Coverage/Continuity (A)	Swidesh chimney Test (SS-4241475) (A) ++	FRLS Test * (A) ++	Tensile & Elongation before & after aging (A) ++	Vol. Resistivity. at room & Elevated Temp. (A) ++	Spark test report review ®
1. Instrument cable twisted and shielded															
Conductor(IS-8130)	Y			Y			Y								
Insulation(VDE-207)				Y	Y	Y	Y						Y		Y
Pairing/Twisting				Y	Y		Y								
Shielding				Y			Y			Y					
Drain wire	Y			Y			Y		Y	Y					
Inner Sheath				Y	Y	Y	Y					Y	Y		
Outer Sheath				Y	Y	Y	Y					Y	Y		
Over all cable	Y	Y	Y	Y	Y		Y	Y			Y			Y	
Cable Drums(IS-10418)				Y			Y								

Note : High Temp. cables shall be subjected to tests as per VDE-207(Part-6) Compensating cables shall be checked for Thermal EMF/Endurance test as per IS 8784.

Note : This is an indicative list of tests/checks. The manufacture is to furnish a detailed Quality Plan indicating his practice & Procedure along with relevant supporting documents during QP finalization for all items.

Note : ® - Routine Test A - Acceptance Test Y - Test Applicable

Note : Sampling Plan for Acceptance test shall be as per IS 8784 (As applicable)

- * FRLS Tests: Oxygen / Temp Index (ASTM D-2863), Smoke Density Rating (ASTM – D 2843), HCL Emission (IEC-754-1)
- ** Characteristic Impedance, Attenuation, Mutual Capacitance, Cross Talk (As applicable)

\+ Sample size will be One No. of each size/type per lot.

++ Sample size will be One No. sample for complete lot offered irrespective of size/type.

CONTROL DESK, PLC PANEL, SMOKE DETECTOR, FIRE ALARM & CONTROL SYSTEM

ITEMS \ TESTS	Visual ®	GA, BOM ,Lay Out of components ®	Dimensions ®	Paint Shade/Thickness/Adhesion ®	Alignment of Section ®	Component Rating/ Make / Type ®	Wiring ®	IR & HV ®	Review of TC for instruments/ Devices/ Recorders, Indicators/ osaic Items/ Transducers ®	Accessibility of TBS/ Devices ®	Illumination ®	Functional Check for Control Element ,	Mimic ®	Test as per IEC 1131 ® *	Test as per Std ® & (A)
1. Control Desk	Y	Y	Y	Y	Y	Y	Y	Y	Y	Y	Y	Y	Y		
2. Annunciation/ Control/ PLC Panel	Y	Y	Y	Y		Y	Y	Y	Y	Y	Y			Y	Y
3.Smoke Detectors (UL-268,EN-54 PT-7), Heat Detectors(UL-521/EN 54 PT-5) Annunciation/ Control Panel (UL -864, EN-54, PT-2)															Y

Note: 1) Detailed procedure of Environmental Stress Screening test shall be as per Quality Assurance Programme in General Technical Conditions

2) This is an indicative list of test/ checks. The manufacturer is to furnish a detailed quality plan indicating the Practice and Procedure alongwith relevant supporting documents.

- *Applicable for PLC
- Y - Test Applicable , ® - Routine Test (A) - Acceptance Test

CLAUSE NO.	QUALITY ASSURANCE & INSPECTION	एनटीपीसी NTPC

CONTROL VALVE ACTUATORS AND ACCESSORIES.

TESTS / ITEMS	Make,model, tag (r)	Dimension®	Surface finish®	Heat treatment®	Material test certificates®	Ibr certificates®	Hydraulic test®	Ut/radiography for >900 lb rating®	Mpi/dp®	Pressure resistance®	Seat leakage®	Timing open/close®	Linearity/hysterisis®	Functional test, review for make and tc of accessories®
CONTROL VALVE AND ACTUATOR														
Overall	Y	Y	Y			Y	Y				Y	Y	Y	Y
Body		Y	Y	Y	Y			Y	Y	Y				
Bonnet		Y	Y	Y	Y									
Trim		Y			Y			Y*						
Pneumatic actuator	Y	Y								Y				
Electro pneumatic positioner	Y													Y

R- ROUTINE TEST A - ACCEPTANCE TEST Y - TEST APPLICABLE

Y* - **UT ON SPINDLE DIA >= 40 MM.**

NOTE : **1)** Detailed procedure of environmental stress screening test shall be as per quality assurance programme general technical conditions

2) This is an indicative list of tests/checks. the manufacture is to furnish a detailed quality plan indicating his practice & procedure along with relevant supporting documents during QP finalisation for all item.

CLAUSE NO.	QUALITY ASSURANCE & INSPECTION	एनटीपीसी NTPC

ELECTRICAL ACTUATOR WITH INTEGRAL STARTER

Test/Attributes / Characteristics / ITEM/ COPONENT/ SUB SYSTEM ASSEMBLY/ TESTING	RPM ®	No Load Current ®	IR & HV Test®	Mounting Dimension®	All routine Test as per Standard & Specification®	Correct Phase Sequence®	Operation & Setting of limit Switch/Torque Switch®	Stall Torque/Current (A)	Hand Wheel operation/ Auto de clutch function (A)	Function of Aux. like Potentiometer, space heater, position indicator	EPT output ®	Grease leakage ®	Local/ Remote (Open-Stop-Close) Operation® Safety check (Single phasing, Phase correction, Tripping etc.) (A)
ELECTRICAL ACTUATOR WITH INTEGRAL STARTER(IS_9334)													
Motor	Y	Y	Y	Y	Y								
Final Testing	Y	Y	Y	Y	Y	Y	Y	Y	Y	Y	Y	Y	Y

Note: 1) Detailed procedure of Environmental Stress Screening test shall be as per Quality Assurance Programme in General Technical Conditions. Requirement of test and procedure finalized during QP finalization

2) This is an indicative list of tests/checks. The manufacturer is to furnish a detailed quality plan indicating the practices and procedure adopted along with relevant supporting documents.

® - Routine Test **(A) - Acceptance Test** **Y - Test applicable**

बीएचईएल BHEL	MANUFACTURER/ BIDDER/ SUPPLIER NAME & ADDRESS	STANDARD QUALITY PLAN		SPEC. NO :	DATE:
		CUSTOMER :		QP NO.: PE-QP-999-145-I056	DATE: 07.02.2020
		PROJECT:		PO NO.: --	DATE: --
		ITEM: LOCAL CONTROL PANEL	SYSTEM: C&I	SECTION: C	SHEET 1 OF 9

SL. NO.	COMPONENT & OPERATIONS	CHARACTERISTICS	CLASS	TYPE OF CHECK	QUANTUM OF CHECK		REFERENCE DOCUMENT	ACCEPTANCE NORMS	FORMAT OF RECORD	*	**			REMARKS
1	2	3	4	5	6		7	8	9	D	M	C	N	
					M	C/N								
	RAW MATERIAL													
1.0	Sheet Steel (CRCA & HR)	1. Chemical Composition	MA	Chemical analysis	Sample	Sample	IS:1079 IS:513	IS:1079 IS:513	Test Certificate	√	P/W	V		
		2. Bend Test	CR	Mech. test	Sample	Sample	IS:1079 IS:513	IS:1079 IS:513	Test Certificate	√	P/W	V		
		3. Surface finish	MA	Visual	100%	10%	Manufacturing Standard	Manufacturing Standard	Inspection Report	√	P/W	---		
		4. Waviness	MA	Visual	100%	10%	Manufacturing Standard	No Waviness	Inspection Report	√	P/W	---		
		5. Thickness	MA	Measurement	100%	10%	Approved Drg/Datasheet	Approved Drg/Datasheet	Inspection Report	√	P/W	V		
		6. Mill marking	MA	Visual	100%	10%	Manufacturing Standard	Manufacturing Standard	Inspection Report	√	P/W	V		
2.0	Flats / Angles / Channels	1. Dimensions	MA	Measurement	Sample	Sample	IS:2062	IS:2062	Test Certificate	√	P/W	---		
		2. Surface Defects	MA	Visual	100%	10%	Manufacturing Standard	Manufacturing Standard	Inspection Report	√	P/W	---		
		3. Straightness	MA	Measurement	100%	10%	Manufacturing Standard	Manufacturing Standard	Inspection Report	√	P/W	---		
		4. Mill marking	MA	Visual	100%	10%	IS:2062	IS:2062	Inspection Report	√	P/W	V		

BHEL					
ENGINEERING			QUALITY		
	Sign & Date	Name		Sign & Date	Name
Prepared by:	14/2/2020	CHETAN MALIK	Checked by:	14/02/2020	KUNDAN PRASAD
Reviewed by:	14/2/2020	RK RAINA	Reviewed by:	14/2/2020	RK JAISWAL

BIDDER/ SUPPLIER	
Sign & Date	
Seal	

FOR CUSTOMER REVIEW & APPROVAL			
Doc No:			
	Sign & Date	Name	Seal
Reviewed by:			
Approved by:			

बीएचईएल BHEL	MANUFACTURER/ BIDDER/ SUPPLIER NAME & ADDRESS	STANDARD QUALITY PLAN	SPEC. NO :	DATE:
		CUSTOMER :	QP NO.: PE-QP-999-145-I056	DATE: 07.02.2020
		PROJECT:	PO NO.: --	DATE: --
		ITEM: LOCAL CONTROL PANEL / SYSTEM: C&I	SECTION: C	SHEET 2 OF 9

SL. NO.	COMPONENT & OPERATIONS	CHARACTERISTICS	CLASS	TYPE OF CHECK	QUANTUM OF CHECK		REFERENCE DOCUMENT	ACCEPTANCE NORMS	FORMAT OF RECORD		AGENCY			REMARKS
1	2	3	4	5	6		7	8	9	*	**			
					M	C/N				D	M	C	N	
3.0	Cables / Wires	1. Visual / Surface defects	MA	Visual	100%	10%	IS:1554 or IS:694	IS:1554 or IS:694	Inspection Report	√	P/W			
		2. IR and HV	MA	Electrical	100%	10%	IS:1554 or IS:694	IS:1554 or IS:694	Inspection Report	√	P/W			
		3. Conductor a) Resistance b) Size c) Sheet colour	 MA MA MA	 Electrical Measurement Visual	 100% 100% 100%	 10% 10% 10%	IS:1554 or IS:694	IS:1554 or IS:694	Inspection Report	√	P/W			
		4. Type / Routine Test Certificates	MA	Verification	100%	10%	IS:1554 or IS:694	IS:1554 or IS:694	Inspection Report	√	P/W			
4.0	Electrical Components like Annunciator Transformers Lamps Switches PBs Contactors Relays	1. Verification at make and Type	CR	Visual	Sample	Sample	Approved Drg/Datasheet	Approved Drg/Datasheet	Test Certificate	√	P/W			
		2. Verification of Test Certificates	CR	Scrutiny of Type / Routine T.Cs.	100%	10%	Relevant Indian Std & Catalogue	Relevant Indian Std & Catalogue	Inspection Report	√	P/W			
		3. Operation / Functional check	CR	Electrical	Sample+ 100% @	Sample+ 10% @	Relevant Indian Std & Catalogue	Relevant Indian Std & Catalogue	Inspection Report	√	P/W			+ for relay & contactors only

BHEL					
ENGINEERING			QUALITY		
	Sign & Date	Name		Sign & Date	Name
Prepared by:	14/2/2020	CHETAN MALIK	Checked by:	14/02/2020	KUNDAN PRASAD
Reviewed by:	14/2/2020	RK RAINA	Reviewed by:	14/2/2020	RK JAISWAL

BIDDER/ SUPPLIER	
Sign & Date	
Seal	

FOR CUSTOMER REVIEW & APPROVAL			
Doc No:			
	Sign & Date	Name	Seal
Reviewed by:			
Approved by:			

बीएच ई एल BHEL	MANUFACTURER/ BIDDER/ SUPPLIER NAME & ADDRESS	STANDARD QUALITY PLAN		SPEC. NO :	DATE:
		CUSTOMER :		QP NO.: PE-QP-999-145-I056	DATE: 07.02.2020
		PROJECT:		PO NO.: --	DATE: --
		ITEM: LOCAL CONTROL PANEL	SYSTEM: C&I	SECTION: C	SHEET 3 OF 9

SL. NO.	COMPONENT & OPERATIONS	CHARACTERISTICS	CLASS	TYPE OF CHECK	QUANTUM OF CHECK		REFERENCE DOCUMENT	ACCEPTANCE NORMS	FORMAT OF RECORD	*	AGENCY			REMARKS
1	2	3	4	5	6		7	8	9	*	**			
					M	C/N				D	M	C	N	
	Timers, Space Heaters, Thermostat, Indicating meters etc.	4. I.R.	MA	Electrical	100%	10%	Relevant Indian Std & Catalogue	Relevant Indian Std & Catalogue	Inspection Report	√	P/W			@ for all components except relays & contactors.
		5. H.V.	MA	Electrical	100%	10%	Relevant Indian Std & Catalogue	Relevant Indian Std & Catalogue	Inspection Report	√	P/W			
		6. Calibration	MA	Electrical	100%	10%	Relevant Indian Std & Catalogue	Relevant Indian Std & Catalogue	Inspection Report	√	P/W	V		
		7. Pick up / Drop off Voltage	MA	Electrical	100%	10%	Relevant Indian Std & Catalogue	Relevant Indian Std & Catalogue	Inspection Report	√	P/W			
5.0	Misc. Components like Gaskets, Terminal Blocks etc.	1. Verification of Type / Make	MA	Visual	Sample	Sample	Manufacturing Standard	Manufacturing Standard	Test Certificate	√	P/W			
		2. Surface defects	MA	Visual	Sample	Sample	Manufacturing Standard	Manufacturing Standard	Test Certificate	√	P/W			
		3. IR / HV on Terminal Blocks	MA	Electrical	Sample	Sample	Manufacturing Standard	Manufacturing Standard	Test Certificate	√	P/W			
	IN PROCESS INSPECTION													

BHEL					
ENGINEERING			QUALITY		
	Sign & Date	Name		Sign & Date	Name
Prepared by:	14/2/2020	CHETAN MALIK	Checked by:	14/02/2020	KUNDAN PRASAD
Reviewed by:	14/2/2020	RK RAINA	Reviewed by:	14/2/2020	RK JAISWAL

BIDDER/ SUPPLIER	
Sign & Date	
Seal	

FOR CUSTOMER REVIEW & APPROVAL			
Doc No:			
	Sign & Date	Name	Seal
Reviewed by:			
Approved by:			

बीएचईएल BHEL	MANUFACTURER/ BIDDER/ SUPPLIER NAME & ADDRESS	STANDARD QUALITY PLAN	SPEC. NO :	DATE:
		CUSTOMER :	QP NO.: PE-QP-999-145-I056	DATE: 07.02.2020
		PROJECT:	PO NO.: --	DATE: --
		ITEM: LOCAL CONTROL PANEL / SYSTEM: C&I	SECTION: C	SHEET 4 OF 9

SL. NO.	COMPONENT & OPERATIONS	CHARACTERISTICS	CLASS	TYPE OF CHECK	QUANTUM OF CHECK		REFERENCE DOCUMENT	ACCEPTANCE NORMS	FORMAT OF RECORD		AGENCY			REMARKS
1	2	3	4	5	6		7	8	9	*	**			
					M	C/N				D	M	C	N	
6.0	Blanking / Bending / Forming	1. Dimensions	MI	Measurement	100%	10%	Approved Drg/Datasheet	Approved Drg/Datasheet	Inspection Report	√	P/W			
		2. Surface defects after bending	MA	Visual	100%	10%	Manufacturing Standard	Manufacturing Standard	Inspection Report	√	P/W			
7.0	Nibbling / Punching	1. Cutout Sizes	MI	Measurement	100%	10%	Approved Drg/Datasheet	Approved Drg/Datasheet	Inspection Report	√	P/W			
		2. Deburring	MA	Visual	100%	10%	Approved Drg/Datasheet	Approved Drg/Datasheet	Inspection Report	√	P/W			
	ASSEMBLY													
8.0	Frame Assembly & Sheet fixing	1. Dimensions	MA	Measurement	100%	10%	Approved Drg/Datasheet	Approved Drg/Datasheet	Inspection Report	√	P/W			
		2. Alignment	MA	Measurement	100%	10%	Approved Drg/Datasheet	Approved Drg/Datasheet	Inspection Report	√	P/W			
		3. Welding Quality	MA	Visual	100%	10%	Approved Drg/Datasheet	Approved Drg/Datasheet	Inspection Report	√	P/W			
		4. Surface defects	MA	Visual	100%	10%	Approved Drg/Datasheet	Approved Drg/Datasheet	Inspection Report	√	P/W			

BHEL					
ENGINEERING			QUALITY		
	Sign & Date	Name		Sign & Date	Name
Prepared by:	14/2/2020	CHETAN MALIK	Checked by:	14/02/2020	KUNDAN PRASAD
Reviewed by:	14/2/2020	RK RAINA	Reviewed by:	14/2/2020	RK JAISWAL

BIDDER/ SUPPLIER	
Sign & Date	
Seal	

FOR CUSTOMER REVIEW & APPROVAL			
Doc No:			
	Sign & Date	Name	Seal
Reviewed by:			
Approved by:			

बी एच ई एल BHEL	MANUFACTURER/ BIDDER/ SUPPLIER NAME & ADDRESS	STANDARD QUALITY PLAN	SPEC. NO :	DATE:
		CUSTOMER :	QP NO.: PE-QP-999-145-I056	DATE: 07.02.2020
		PROJECT:	PO NO.: --	DATE: --
		ITEM: LOCAL CONTROL PANEL / SYSTEM: C&I	SECTION: C	SHEET 5 OF 9

SL. NO.	COMPONENT & OPERATIONS	CHARACTERISTICS	CLASS	TYPE OF CHECK	QUANTUM OF CHECK		REFERENCE DOCUMENT	ACCEPTANCE NORMS	FORMAT OF RECORD		AGENCY			REMARKS
1	2	3	4	5	6		7	8	9	*	**			
					M	C/N				D	M	C	N	
9.0	Pre-treatment and Painting	1. Pretreatment Process	MA	Visual	100%	10%	Manufacturing Standard	Manufacturing Standard	Inspection Report	√	P/W	V		
		2. Process parameters like bath temp. concentration etc.	MA	Measurement	Periodic	Periodic	Manufacturing Standard	Manufacturing Standard	Inspection Report	√	P/W	V		
		3. Dipping / Removal Time	MA	Measurement	100%	10%	Manufacturing Standard	Manufacturing Standard	Inspection Report	√	P/W	V		
		4. Surface quality after every dip	MA	Visual	100%	10%	Manufacturing Standard	Manufacturing Standard	Inspection Report	√	P/W	V		
		5. Primer after phosphating	MA	Visual, Thickness	100%	10%	Manufacturing Standard	Manufacturing Standard	Inspection Report	√	P/W	V		
		6. Putty Application & Rubbing after primer	MA	Visual	100%	10%	Manufacturing Standard	Manufacturing Standard	Inspection Report	√	P/W	V		
		7. Paint first coat	MA	Visual, Thickness	100%	10%	Manufacturing Standard	Manufacturing Standard	Inspection Report	√	P/W	V		

BHEL					
ENGINEERING			QUALITY		
	Sign & Date	Name		Sign & Date	Name
Prepared by:	14/2/2020	CHETAN MALIK	Checked by:	14/02/2020	KUNDAN PRASAD
Reviewed by:	14/2/2020	RK RAINA	Reviewed by:	14/2/2020	RK JAISWAL

BIDDER/ SUPPLIER	
Sign & Date	
Seal	

FOR CUSTOMER REVIEW & APPROVAL			
Doc No:			
	Sign & Date	Name	Seal
Reviewed by:			
Approved by:			

बीएचईएल BHEL	MANUFACTURER/ BIDDER/ SUPPLIER NAME & ADDRESS	STANDARD QUALITY PLAN		SPEC. NO :	DATE:
		CUSTOMER :		QP NO.: PE-QP-999-145-I056	DATE: 07.02.2020
		PROJECT:		PO NO.: --	DATE: --
		ITEM: LOCAL CONTROL PANEL	SYSTEM: C&I	SECTION: C	SHEET 6 OF 9

SL. NO.	COMPONENT & OPERATIONS	CHARACTERISTICS	CLASS	TYPE OF CHECK	QUANTUM OF CHECK		REFERENCE DOCUMENT	ACCEPTANCE NORMS	FORMAT OF RECORD		AGENCY			REMARKS
1	2	3	4	5	6		7	8	9	*	**			
					M	C/N				D	M	C	N	
		8. Putty Application and Rubbing after first coat of paint	MA	Visual	100%	10%	Manufacturing Standard	Manufacturing Standard	Inspection Report	√	P/W	V		
		9. Paint second coat	MA	Visual, Thickness, Scratch test Colour adhesion	100%	10%	Manufacturing Standard	Manufacturing Standard	Inspection Report	√	P/W	V		
10.	Panel Wiring	1. Wiring Layout	MA	Visual	100%	10%	Approved Drg/Datasheet	Approved Drg/Datasheet	Inspection Report	√	P/W			
		2. Wiring Termination (Crimped Lugs)	MA	Visual	100%	10%	Approved Drg/Datasheet	Approved Drg/Datasheet	Inspection Report	√	P/W			
		3. Ferrule numbers	MA	Visual	100%	10%	Approved Drg/Datasheet	Approved Drg/Datasheet	Inspection Report	√	P/W			
		4. Colour of wiring	MA	Visual	100%	10%	Approved Drg/Datasheet	Approved Drg/Datasheet	Inspection Report	√	P/W	V		
		5. Size of Conductor	MA	Measurement	100%	10%	Approved Drg/Datasheet	Approved Drg/Datasheet	Inspection Report	√	P/W	V		
11.	Component Mounting	1. Correct components	MA	Visual	100%	10%	Approved Drg/Datasheet	Approved Drg/Datasheet	Inspection Report	√	P/W			
		2. Fixing	MA	Visual	100%	10%	Approved Drg/Datasheet	Approved Drg/Datasheet	Inspection Report	√	P/W			

BHEL					
ENGINEERING			QUALITY		
	Sign & Date	Name		Sign & Date	Name
Prepared by:	14/2/2020	CHETAN MALIK	Checked by:	14/02/2020	KUNDAN PRASAD
Reviewed by:	14/2/2020	RK RAINA	Reviewed by:	14/2/2020	RK JAISWAL

BIDDER/ SUPPLIER	
Sign & Date	
Seal	

FOR CUSTOMER REVIEW & APPROVAL			
Doc No:			
	Sign & Date	Name	Seal
Reviewed by:			
Approved by:			

बीएचईएल BHEL	MANUFACTURER/ BIDDER/ SUPPLIER NAME & ADDRESS	STANDARD QUALITY PLAN		SPEC. NO :	DATE:
		CUSTOMER :		QP NO.: PE-QP-999-145-I056	DATE: 07.02.2020
		PROJECT:		PO NO.: --	DATE: --
		ITEM: LOCAL CONTROL PANEL	SYSTEM: C&I	SECTION: C	SHEET 7 OF 9

SL. NO.	COMPONENT & OPERATIONS	CHARACTERISTICS	CLASS	TYPE OF CHECK	QUANTUM OF CHECK		REFERENCE DOCUMENT	ACCEPTANCE NORMS	FORMAT OF RECORD		AGENCY			REMARKS
1	2	3	4	5	6		7	8	9	*	**			
					M	C/N				D	M	C	N	
	FINAL TESTING													
12.	Final Inspection	1. Workmanship	MA	Visual	100%	10%	Manufacturing Standard	Manufacturing Standard	Inspection Report	√	P/W	W		
		2. Component layout (neatness, accessibility & safety) Mounting / Proper fixing of all components	MA	Visual	100%	10%	Approved Drg/Datasheet	Approved Drg/Datasheet	Inspection Report	√	P/W	W		At Random by BHEL, based on 100 % internal test reports by Mfr.
		3. Components identification Marking / Name plates	MA	Visual	100%	10%	Approved Drg/Datasheet	Approved Drg/Datasheet	Inspection Report	√	P/W	W		
		5. Dimensions	MA	Measurement	100%	10%	Approved Drg/Datasheet	Approved Drg/Datasheet	Inspection Report	√	P/W	W		
		6. Door functioning	MA	Functional	100%	10%	Approved Drg/Datasheet	Approved Drg/Datasheet	Inspection Report	√	P/W	W		At Random by BHEL, based on 100 % internal test reports by Mfr.
		7. Paint Shade	CR	Visual	100%	10%	Approved Drg/Datasheet	Approved Drg/Datasheet	Inspection Report	√	P/W	W		

BHEL					
ENGINEERING			QUALITY		
	Sign & Date	Name		Sign & Date	Name
Prepared by:	14/2/2020	CHETAN MALIK	Checked by:	14/02/2020	KUNDAN PRASAD
Reviewed by:	14/2/2020	RK RAINA	Reviewed by:	14/2/2020	RK JAISWAL

BIDDER/ SUPPLIER	
Sign & Date	
Seal	

FOR CUSTOMER REVIEW & APPROVAL			
Doc No:			
	Sign & Date	Name	Seal
Reviewed by:			
Approved by:			

बीएचईएल BHEL	MANUFACTURER/ BIDDER/ SUPPLIER NAME & ADDRESS	STANDARD QUALITY PLAN	SPEC. NO :	DATE:
		CUSTOMER :	QP NO.: PE-QP-999-145-I056	DATE: 07.02.2020
		PROJECT:	PO NO.: --	DATE: --
		ITEM: LOCAL CONTROL PANEL / SYSTEM: C&I	SECTION: C	SHEET 8 OF 9

SL. NO.	COMPONENT & OPERATIONS	CHARACTERISTICS	CLASS	TYPE OF CHECK	QUANTUM OF CHECK		REFERENCE DOCUMENT	ACCEPTANCE NORMS	FORMAT OF RECORD		AGENCY			REMARKS
1	2	3	4	5	6		7	8	9	*	**			
					M	C/N				D	M	C	N	
		8. Paint Thickness	CR	Measurement	100%	10%	Approved Drg/Datasheet	Approved Drg/Datasheet	Inspection Report	√	P/W	W		
		9. Workmanship of Gaskets	MA	Visual	100%	10%	Manufacturing Standard	Manufacturing Standard	Inspection Report	√	P/W	W		
		10. Wiring Layout	MA	Visual	100%	10%	Approved Drg/Datasheet	Approved Drg/Datasheet	Inspection Report	√	P/W	W		
		11. Wire Termination	MA	Pulling manually	Sample	Sample	-----	Firm termination	Inspection Report	√	P/W	W		
		12. Continuity	MA	Electrical	100%	10%	-----	Continuity OK	Inspection Report	√	P/W	W		
13.	TYPE TEST	Degree of Protection	CR	Mech. Protection	Sample	Sample	Approved Drg/Datasheet Relevant IS-13947 Part-1, IS-2148.	Approved Drg/Datasheet Relevant IS-13947 Part-1, IS-2148.	Type Test Certificate	√	P/W	V		
14	ROUTINE TEST	IR before & after HV Test	CR	Electrical	100%	10%	Approved Drg/Datasheet Relevant IS.	Approved Drg/Datasheet Relevant IS.	Inspection Report	√	P/W	W		

BHEL					
ENGINEERING			QUALITY		
	Sign & Date	Name		Sign & Date	Name
Prepared by:	14/2/2020	CHETAN MALIK	Checked by:	14/02/2020	KUNDAN PRASAD
Reviewed by:	14/2/2020	RK RAINA	Reviewed by:	14/2/2020	RK JAISWAL

BIDDER/ SUPPLIER	
Sign & Date	
Seal	

FOR CUSTOMER REVIEW & APPROVAL			
Doc No:			
	Sign & Date	Name	Seal
Reviewed by:			
Approved by:			

बीएचईएल BHEL	MANUFACTURER/ BIDDER/ SUPPLIER NAME & ADDRESS	STANDARD QUALITY PLAN	SPEC. NO :	DATE:
		CUSTOMER :	QP NO.: PE-QP-999-145-I056	DATE: 07.02.2020
		PROJECT:	PO NO.: --	DATE: --
		ITEM: LOCAL CONTROL PANEL / SYSTEM: C&I	SECTION: C	SHEET 9 OF 9

SL. NO.	COMPONENT & OPERATIONS	CHARACTERISTICS	CLASS	TYPE OF CHECK	QUANTUM OF CHECK		REFERENCE DOCUMENT	ACCEPTANCE NORMS	FORMAT OF RECORD		AGENCY			REMARKS
1	2	3	4	5	6		7	8	9	*	**			
					M	C/N				D	M	C	N	
15	FUCTIONAL TEST	1. Control Logic Operation	CR	Electrical	100%	10%	Approved Drg/Datasheet	Approved Drg/Datasheet	Inspection Report	√	P/W	W		
		2. Instrument Calibration	CR	Electrical	10%	10%	Approved Drg/Datasheet	Approved Drg/Datasheet	Inspection Report	√	P/W	W		
		3. Temperature rise	CR	Electrical	100%	10%	Approved Drg/Datasheet Relevant IS.	Approved Drg/Datasheet Relevant IS.	Inspection Report	√	P/W	W		

NOTES:

1. Customer's specification for painting shall be included in the technical specification. In the absence of Customer's spec. for painting, vendor to obtain BHEL's approval on their painting specification / procedure.
2. Copies of all TC's (Test Certificates) for components shall be submitted to BHEL for verification and acceptance.
3. BHEL reserves the right to conduct repeat tests, if required.

LEGENDS:
*RECORDS, INDENTIFIED WITH "TICK"(√) SHALL BE ESSENTIALLY INCLUDED BY SUPPLIER IN QA DOCUMENTATION, **D**: DOCUMENTATION,
** **M**: SUPPLIER/ MANUFACTURER/ SUB-SUPPLIER, **C**: MAIN SUPPLIER/ BHEL/ THIRD PARTY INSPECTION AGENCY, **N**: CUSTOMER,
P: PERFORM, **W**: WITNESS, **V:** VERIFICATION, AS APPROPRIATE
MA: MAJOR, **MI**: MINOR, **CR:** CRITICAL

BHEL					
ENGINEERING			QUALITY		
	Sign & Date	Name		Sign & Date	Name
Prepared by:	14/2/2020	CHETAN MALIK	Checked by:	14/02/2020	KUNDAN PRASAD
Reviewed by:	14/2/2020	RK RAINA	Reviewed by:	14/2/2020	RK JAISWAL

BIDDER/ SUPPLIER	
Sign & Date	
Seal	

FOR CUSTOMER REVIEW & APPROVAL			
Doc No:			
	Sign & Date	Name	Seal
Reviewed by:			
Approved by:			

TYPE TEST REQUIREMENTS

1.00.00 TYPE TEST REQUIREMENTS

1.01.00 General Requirements

1.01.01 The Contractor shall furnish the type test reports of all type tests as per relevant standards and codes as well as other specific tests indicated in this specification. A list of such tests are given for various equipment in table titled 'TYPE TEST REQUIREMENT FOR C&I SYSTEMS' at the end of this chapter and under the item Special Requirement for Solid State Equipments/Systems. For the balance equipment instrument, type tests may be conducted as per manufactures standard or if required by relevant standard.

(a) Out of the tests listed, the Bidder/ sub-vendor/ manufacturer is required to conduct certain type tests specifically for this contract (and witnessed by Employer or his authorized representative) even if the same had been conducted earlier, as clearly indicated subsequently against such tests.

(b) For the rest, submission of type test results and certificate shall be acceptable provided.

i. The same has been carried out by the Bidder/ sub-vendor on exactly the same model /rating of equipment.

ii. There has been no change in the components from the offered equipment & tested equipment.

iii. The test has been carried out as per the latest standards alongwith amendments as on the date of Bid opening but not more than five (5) year back.

(c) In case the approved equipment is different from the one on which the type test had been conducted earlier or any of the above grounds, then the tests have to be repeated and the cost of such tests shall be borne by the Bidder/ sub-vendor within the quoted price and no extra cost will be payable by the Employer on this account.

1.01.02 As mentioned against certain items, the test certificates for some of the items shall be reviewed and approved by the main Bidder or his authorized representative and the balance have to be approved by the Employer.

1.01.03 The schedule of conduction of type tests/ submission of reports shall be submitted and finalized during pre-award discussion.

CLAUSE NO.	TECHNICAL REQUIREMENTS
1.01.04	For the type tests to be conducted, Contractor shall submit detailed test procedure for approval by Employer. This shall clearly specify test setup, instruments to be used, procedure, acceptance norms (wherever applicable), recording of different parameters, interval of recording precautions to be taken etc. for the tests to be carried out.
1.01.05	The Bidder shall indicate in the relevant BPS schedule, the cost of the type test for each item only for which type tests are to be conducted specifically for this project. The cost shall only be payable after conduction of the respective test in presence of authorize representative of Employer. If a test is waived off, then the cost shall not be payable.
2.00.00	**SPECIAL REQUIREMENT FOR SOLID STATE EQUIPMENTS/ SYSTEMS**
2.01.00	The minimum type test reports, over and above the requirements of above clause, which are to be submitted for each of the major C&I systems Analyzer instruments, various PLCs etc. shall be as indicated below: i) Surge Protections for Solid State Equipments/ Systems All solid state systems/ equipments shall be able to withstand the electrical noise and surges as encountered in actual service conditions and inherent in a power plant. All the solid state systems/ equipments shall be provided with all required protections that needs the surge withstand capability as defined in ANSI 37.90a/ IEEE-472. Hence, all front end cards which receive external signals like Analog input & output modules, Binary input & output modules etc. including power supply, data highway, data links shall be provided with protections that meets the surge withstand capability as defined in ANSI 37.90a/ IEEE-472. Complete details of the features incorporated in electronics systems to meet this requirement, the relevant tests carried out, the test certificates etc. shall be submitted alongwith the proposal. As an alternative to above, suitable class of IEC-60255-4 which is equivalent to ANSI 37.90a/ IEEE-472 may also be adopted for SWC test. ii) Dry Heat test as per IEC-68-2-2 or equivalent. iii) Damp Heat test as per IEC-68-2-3 or equivalent. iv) Vibration test as per IEC-68-2-6 or equivalent. v) Electrostatic discharge tests as per IEC 61000-4-2 or equivalent. vi) Radio frequency immunity test as per EN 50082-2 or equivalent.

CLAUSE NO.	TECHNICAL REQUIREMENTS
	vii) Electromagnetic immunity as per EN 61131-2 or equivalent. Test listed at item no. v, vi, vii, above are applicable for front end cards only as defined under item (i) above.

3.00.00 TYPE TEST REQUIREMENT FOR C&I SYSTEMS

Sl No	Item	Test requirement	Standard	Test to be specifically conducted	NTPC's approval req. On test certificate	Remarks
Col 1	Col 2	Col 3	Col 4	Col 5	Col 6	Col 7
1	Elect. Metering instruments	As per standard (col 4)	IS-1248	No	Yes	
2	Electronic transmitter	As per standard (col 4)	BS-6447 / IEC-60770	No	Yes	
3	INSTRUMENTATION CABLES TWISTED & SHIELDED			No	Yes	
4	Pressure gauge	Degree of protection test	IS-2147	No	No	
		Temp interference test	IS -3624	No	No	
5	Temperature gauge	Degree of protection test	IS-2147	No	No	
6	Pressure & DP switch	Degree of protection test	IS-2147	No	No	
		As per standard (col 4)	BS 6134	No	No	
7	Level switch	Degree of protection test	IS-2147	No	No	
8	Control valves	CV Test	ISA 75.02	No	Yes	
9	Flow Nozzles & Orifice plate	Calibration	ASME PTC , BS 1042	No	Yes	
10	PLCs	All tests as per IEC-1131	IEC-601131	No	Yes	

Sl No	Item	Test requirement	Standard	Test to be specifically conducted	NTPC's approval req. On test certificate	Remarks
Col 1	Col 2	Col 3	Col 4	Col 5	Col 6	Col 7
11	Junction Box	Degree of protection test	IS-13947	No	Yes	
12	Battery charger (Not required for inbuilt chargers)	Degree of protection test	IS-13947	No	No	
		Short circuit current capability	IEC-60146-2	No	Yes	
		Temp rise test without redundant fans	Approved procedure, IEC 60146-2	No	Yes	
		SWC test	Approved procedure	No	Yes	
		Burn-in-test	Approved procedure	No	Yes	
		Efficiency	IEC-60146-2,	No	Yes	
		Audible Noise Test	IEC 60146-2	No	Yes	
		Fuse Clearing Capability	Approved procedure	No	Yes	
		Relative harmonic content	Approved procedure	No	Yes	

Sl No	Item	Test requirement	Standard	Test to be specifically conducted	NTPC's approval req. On test certificate	Remarks
Col 1	Col 2	Col 3	Col 4	Col 5	Col 6	Col 7
		ESD immunity test	IEC-61000-4-2-9(1)	No	Yes	
		Radio interference	IEC 60146-2	No	Yes	
		Over Load Test on Inverter & charger	Approved procedure	No	Yes	
		Restart Test	IEC 60146-2	No	Yes	
		Output voltage tolerance	Approved	No	Yes	
		Output voltage Harmonic content	Approved procedure	No	Yes	
		Insulation test	IEC 60146	No	Yes	
		Load Tests	Approved procedure	No	Yes	
		Preliminary light load test	IEC 60146	No	Yes	
		Current division / Voltage division	IEC 60146-2	No	Yes	
13	Battery	As per standard (col 4)	IEC –623 / IS 10918 for Ni-Cd IS-1652 for Plante Lead Acid	No	Yes	
14	Voltage stabilizers	Over Load Test	Approved procedure	No	Yes	

Sl No	Item	Test requirement	Standard	Test to be specifically conducted	NTPC's approval req. On test certificate	Remarks
Col 1	Col 2	Col 3	Col 4	Col 5	Col 6	Col 7
		Temp rise test without redundant fans	Approved procedure	No	Yes	

	Pneumatic air-filter/Regulator of each type, make rating etc.	10% or 2 Nos., whichever is more
	Air lock relays	10% or 2 nos. of each type whichever is more
1.05.00	**PNEUMATICS ISOLATION / BLOCK VALVES, ACTUATORS & ACCESSORIES (For all ON/OFF valves supplied under this package)**	
	Pneumatic actuator assembly	10% or 1 no. of each type, model and rating, whichever is more.
	Diaphragms, O' rings, seals etc. of all types make etc.	1 no of each type and rating
	Limit switches (complete unit) & accessories (link assembly)	10% or 2 Nos., whichever is more
	Pneumatic air-filter/Regulator of each type, make rating etc.	10% or 2 Nos., whichever is more
	Solenoid valves	10% or 2 nos. of each type whichever is more
1.06.00	**ELECTRICAL ACTUATORS**	
	Actuators	1 no of each type and rating
	Electronic PCB of all types	10% of each type & model
	Absolute Encoder (replaceable part)	5% of each type & model
	Electronic Torque sensor	5% of each type & model
NOTE:		
1	Wherever set is mentioned, one set of the spares of that item shall be for complete replacement of that particular item for one equipment.	
2	Any fraction of a item shall mean the next higher	
3	Wherever quantity has been specified as percentage (%), the quantity of mandatory spares to be provided by contractor shall be the specified percentage (%) of the total population of the plant. In case, the quantity so calculated happens to be fraction, the same shall be rounded off to next higher whole number.	
4	Wherever the quantities have been indicated for each type, size, thickness, material, radius, range, etc., these shall cover all the items supplied and installed and the breakup for these shall be furnished in the bid.	
5	In case, spares indicated in the list are not applicable to the particular design offered by the bidder, the bidder should offer spares applicable to offered design with quantities generally in line with the approach followed in the above list.	

	C&I SPECIFICATION FOR LIME DOSING SYSTEM	SECTION: C SUB SECTION: C&I

SUB VENDOR LIST

PACKAGE WISE REGISTERED SUPPLIER LIST (PERMANENT CATEGORY) AS ON 2/22/2020 3:23:31 PM

Sl No	Package Name	Supplier Name	Supplier Communication Address	Supplier Works Address
1	CONTROL VALVE	Valvitalia S.P.A. ,	Mr. Salvatore Ruggeri Via Tortona 69, Rivanazzano (Pavia) Phone- +39-03839459875 Pincode : 27055 Email : dario.torluccio@valviatalia.com	Works-1->Mr. Salvatore Ruggeri Via Tortona 69,Rivanazzano (Pavia) -- Italy Phone- +39-03839459875 FAX : Pincode : 27055 Email : dario.torluccio@valviatalia.com; diego.poletti@valvitalia.com; sales@bhgassociates.com
2	CONTROL VALVE	R.K.CONTROL INSTRUMENTS PVT. LTD.	PLOT NO.A-250, OPP.POLICE STATION, WAGLE INDUSTRIAL ESTATE, THANE Phone- 25820943/2331 Pincode : 400604 Email : rkcipl@vsnl.com ; rkcinpvt@bol.net.in	Works-1->SAVITH KUMAR PLOT NO. A-250, OPP.POLICE STATION,WAGLE INDUSTRIAL ESTATE, THANE -THANE-MAHARASHTRA INDIA Phone- 022-'66060942 FAX : 022-25820801 Pincode : 400 604 Email : rkadmin@rkcipl.co.in
3	CONTROL VALVE	Mascot Valves Pvt. Ltd.	166-167 GIDC Naroda Ahmedabad Phone- 0792282 1619 Pincode : 382330 Email : dom.sales@mascotvalves.com	Works-1->Varun Patel Dir 166-167 ,GIDC Naroda -Ahmedabad-GUJARAT India Phone- 0792282 1619 / 3369 FAX : Pincode : 382330 Email : dom.sales@mascotvalves.com
4	CONTROL VALVE	EMERSON PROCESS MANAGEMENT CHENNAI LIMITED	147, KARAPAKKAM VILLAGE, CHENNAI Phone- 23722184, 23716242 Pincode : 600096 Email : jatinder.singh@emerson.com	Works-1->Mr. Rangarajan (Head - Lean and Manufact 147,Karapakkam Village, -Chennai-TAMIL NADU India Phone- 0444903 4395 FAX : Pincode : 600097 Email : Rangarajan.M@emerson.com
5	CONTROL VALVE	Severn Glocon India Pvt. Ltd.	F96 & F97, Sipcot Industrial Park, Irungattukottai, Chennai, Phone- 044-47104200, Pincode : 602117, Email : info@severnglocon.co.in,	Works-1->Mr. K.Kaushik, F96 & F97, Sipcot Industrial Park,Irungattukottai, -Chennai-TAMIL NADU India Phone- 044-47104200, FAX : 044-47100073, Pincode : 602117, Email : info@severnglocon.co.in
6	CONTROL VALVE	BOMAFA SPECIAL VALVE SOLUTIONS PVT LTD	Mr. K.M. Anklesaria/ R. M. Anklesaria Plot No: 285/2, Panchratna Estate, Near Ramol Bridge, Vatva Ahmedabad Phone- 079-40083825 Pincode : 382445 Email : info@bomafa-india.com	Works-1->Mr. K.M. Anklesaria/ Mr. R.M. Anklesaria Dir Plot No: 285/2, Panchratna Estate, Near Ramol Bridge, Vatva, -Ahmedabad-GUJARAT INDIA Phone- 079-40083825 FAX : Pincode : 382445 Email : info@bomafa-india.com
7	CONTROL VALVE	FORBES MARSHALL ARCA PVT.LTD.	A-34/35 , MIDC ESTATE, H-BLOCK, PIMPRI, PUNE, Phone- 020-27442020, Pincode : 411018 Email : mnadgaundi@forbesmarshall.com	Works-1->Mr. Sanjeev Shinde A-34/35 MIDC Estate,H Block, Pimpri, -Pune-MAHARASHTRA India Phone- 9323176406 FAX : 020-27442040 Pincode : 411018 Email : sshinde@forbesmarshall.com
8	CONTROL VALVE	INSTRUMENTATION LTD.	KANJIKODE WEST, PALALKKAD, PALAKKAD Phone- 2566127-130,2567128 Pincode : 678623 Email : icvldil@gmail.com;fa2@ilpgt.com	Works-1->D.SASIDHARAN, AGM(Works&PPC) KANJIKODE WEST, -PALAKKAD-KERALA INDIA Phone- 0491-2566536 FAX : 0491-2566135 Pincode : 678623 Email : sasidharan@ilpgt.com;mraj@ilpgt.com;gireesh@ilpgt.com, commercial@ilpgt.com;fa2@ilpgt.com;nazeera@ilpgt.com;pkv@ilpgt.com;remith@ilpgt.com
9	CONTROL VALVE	Koso India Private Limited,	H 33 & 34, MIDC, Ambad, Nashik, Phone- 09650233433 Pincode : 422010, Email : jetmal.gour@koso.co.in	Works-1->P.J.ASHOK KUMAR/SEEMA ANAND Control Valve Division, H-33&34, MIDC, Ambad, -Nashik-MAHARASHTRA India Phone- 91 944 744 3198 FAX : 0491 - 5269914 Pincode : 422010 Email : pja@koso.co.in;enquiry@koso.co.in Works-2->+P.J.ASHOK KUMAR/SEEMA ANAND J-1,MIDC,Ambad -Nashik-MAHARASHTRA India Phone- 91 944 744 3198 FAX : 0491 - 5269914 Pincode : 422010 Email : pja@koso.co.in;enquiry@koso.co.in
10	CONTROL VALVE	SAMSON CONTROLS PVT. LTD.	Mr. Atul raje-MD D 281, MIDC Ranjangaon Ta Shirur Pune Phone- 02067246600 Pincode : 412220 Email : sales@samsoncontrols.net	Works-1-> Others D 281, MIDC Ranjangaon -Pune-MAHARASHTRA India Phone- 02067246600,8554997963 FAX : Pincode : 412220 Email : sales@samsoncontrols.net
11	CONTROL VALVE	KSB MIL CONTROLS LTD.	Mr.Jacob Cherian/Mr.Geo Jolly Meladoor, Annamanada P.O. MALA, Thrissur Phone- 0480-2695700 Pincode : 680741 Email : biju.simon@ksb.com	Works-1->Mr.Biju Simon/Mr.Jose Paul Meladoor, Annamanada, -Thrissur-KERALA INDIA Phone- 9447555500 FAX : 91 480 2890952 Pincode : 680741 Email : jose.paul@ksb.com

12	CONTROL VALVE	SUZHOU DELAN ENERGY SCIENCE & TECHNOLOGY CO., LTD.	No 566 Fangqiao Road Caohu Industrial Park, Xiangcheng Economic Development Zone, Suzhou Phone- 008618012776062 Pincode : 215143 Email : jeanielei@delan-valve.com	Works-1->Mr. Zong Xin CEO No 566 Fangqiao Road Caohu Industrial Park,Xiangcheng E. Z. -Suzhou-Foreign Country CHINA Phone- 008618012776062 FAX : Pincode : 215143 Email : jeanielei@delan-valve.com
13	CONTROL VALVE	WALDEMAR PRUSS ARMATURENFABRIK GMBH	Mr. Winfried Dremhel Schulenburgerlandstrasse 261, Hannover Phone- +49-511279260 Pincode : 30419 Email : dremhel@pruss.de; vogel@pruss.de	Works-1->Mr. Winfried Dremhel CEO Schulenburgerlandstrasse 261, -Hannover-GERMANY Phone- +49-511279260 FAX : Pincode : 30419 Email : dremhel@pruss.de
14	PRESSURE SWITCH/DIFF. PRESSURE SWITCH	Kaustubha Udyog,	S.No. 36/1/1, Sinhgad Road, Vadgaon Khurd, Near Lokmat Press, Pune, Phone- 020-24393577, Pincode : Email : pressure@vsnl.com,	
15	PRESSURE SWITCH/DIFF. PRESSURE SWITCH	PRECISION MASS PRODUCTS PVT. LTD.	Mr. Nishit Patel/Mr. Anuj Verma Plot No.2306, Phase II, GIDC Chhatral Kalol Phone- 9999464663 Pincode : 382729 Email : sales@precisionmass.com	Works-1->Mr. Hitesh Parmar/Mr. Hitesh Parmar Plot No.2306, Phase II, GIDC Chhatral, -Kalol-GUJARAT INDIA Phone- 9327359227 FAX : 02764-233440 Pincode : 382729 Email : hitesh.parmar@ashcroftindia.com
16	PRESSURE SWITCH/DIFF. PRESSURE SWITCH	SWITZER PROCESS INSTRUMENTS PVT. LTD.	Mr. V S Jayaprakash, 128, SIDCO North Phase, Ambattur Estates CHENNAI Phone- 044-26252017/2018 Pincode : 600050 Email : sales@switzerprocess.co.in	Works-1->C S Shankar 127, Sidco North Phase, Ambattur Estates, -CHENNAI-TAMIL NADU INDIA Phone- 8754491904 FAX : 044-26248849 Pincode : 600050 Email : cservice@switzerinstrument.com
17	PRESSURE SWITCH/DIFF. PRESSURE SWITCH	GENERAL INSTRUMENTS CONSORTIUM	Mr. Amarendra Kulkarni 194/195, Gopi Tank Road, Off. Pandurang Naik Marg, Mahim Mumbai Phone- 9323195251 Pincode : 400016 Email : amarendra@general-gauges.com	
18	PRESSURE SWITCH/DIFF. PRESSURE SWITCH	Barksdale GmbH, Germany	Michael Weileder Dorn Assenheimer, Strasse 27 Reichelsheim Phone- +91-9999107840 Pincode : D-61203 Email : msingh@barksdale.de	
19	PRESSURE SWITCH/DIFF. PRESSURE SWITCH	DRESSER INDUSTRIES INC.	Mr. Nishit Patel/Mr. Anuj Verma Plot No.2306, Phase II, GIDC Chhatral Kalol Phone- 02764-233682 Pincode : 382729 Email : Nishit.patel@ashcroftindia.com	
20	PRESSURE SWITCH/DIFF. PRESSURE SWITCH	SOR INC.	LARRY DEGARMO/Avdhesh Chandra, 14685 W. 105TH STREET LENEXA Phone- 09810905139, Pincode : 66215 Email : Ldegarmo@sorinc.com, avdhesh@sherman-india.com	Works-1->LARRY DEGARMO/ ROY STUMBOUGH 14685 W. 105TH STREET, LENEXA -KANSAS- USA Phone- 913-888-0767 FAX : 913-888-0767 Pincode : 66215 Email : rstumbough@sorinc.com
21	PRESSURE SWITCH/DIFF. PRESSURE SWITCH	INDFOS INDUSTRIES LIMITED	B-20-21, INDUSTRIAL AREA, MEERUT ROAD, GHAZIABAD Phone- 0120-2712016 Pincode : Email : mktg@indfos.com	
22	PRESSURE SWITCH/DIFF. PRESSURE SWITCH	INDFOS (INDIA) LIMITED	MR.L.C.VENKATRANGAN/MR.B.KANNAN New No.17, II Floor, Adwave Towers, Dr.Sevalia Shivaji Salai, T.Nagar Chennai Phone- +91 44 24353407 Pincode : 600017 Email : delhi@indfos.com	
23	PRESSURE GAUGE/ DIFF.PRESSURE GAUGE	BOSE PANDA INSTRUMENTS PVT.LTD.	Mr. Partha Bose 44, Saheed Hemanta Kumar Bose, Sarani, Kolkata Phone- +91 33 2548 7220 Pincode : 700074 Email : parthabosebpi@gmail.com; bosepanda@vsnl.net	Works-1->Mr. Partha Bose 44, Saheed Hemanta Kumar Bose,Sarani, -Kolkata-WEST BENGAL India Phone- +91 33 2548 7220 FAX : +91 33 2548 0429, Pincode : 700074 Email : parthabosebpi@gmail.com bosepanda@vsnl.net
24	PRESSURE GAUGE/ DIFF.PRESSURE GAUGE	A.N. INSTRUMENTS PVT. LTD.	MARKETING DIVISION, 5th FLOOR, 59-B, CHOWRINGHEE ROAD, KOLKATA Phone- 24757784,22472509 Pincode : 700020 Email : anidel@bol.net.in	Works-1->Mr. Gautam Mukherjee Kusumba,Sonarpur Station Road,P.O. -Narendrapur, -Kolkata-WEST BENGAL INDIA Phone- 9836878855 FAX : 033-24342748 Pincode : 700103 Email : gkm_ani@hotmail.com
25	PRESSURE GAUGE/ DIFF.PRESSURE GAUGE	H.GURU INDUSTRIES	Mr. G. D. Hazra/Mr. P. K. Mitra 10 B, HO-CHI-MINH SARANI, KOLKATA Phone- 033 2282 2463 / 1637 Pincode : 700071 Email : mguru@vsnl.net	Works-1->NA NA -- Phone- FAX : Pincode : Email :

26	PRESSURE GAUGE/ DIFF.PRESSURE GAUGE	FORBES MARSHALL (HYD) LTD.	MR SAILESH PATALAY/MR. M K SRINIVASAN PLOT NO.A-19/2, & T-4/2, IDA, NACHARAM, HYDERABAD Phone- 9849913704 Pincode : 500 076 Email : mksrinivasan@forbesmarshall.com	Works-1->MR G.SRINIVASAN/MR ANUJ MALPANI PLOT NO:A-19/2 & T-4/2,I.DA. NACHARAM , -HYDERABAD-TELANGANA INDIA Phone- 09866550762 FAX : 040 27152193 Pincode : 560076 Email : gshrinivasan@forbesmarshall.com
27	PRESSURE GAUGE/ DIFF.PRESSURE GAUGE	PRECISION MASS PRODUCTS PVT. LTD.	Mr. Nishit Patel/Mr. Anuj Verma Plot No.2306, Phase II, GIDC Chhatral Kalol Phone- 9999464663 Pincode : 382729 Email : sales@precisionmass.com	Works-1->Mr. Hitesh Parmar/Mr. Hitesh Parmar Plot No.2306, Phase II, GIDC Chhatral, -Kalol-GUJARAT INDIA Phone- 9327359227 FAX : 02764-233440 Pincode : 382729 Email : hitesh.parmar@ashcroftindia.com
28	PRESSURE GAUGE/ DIFF.PRESSURE GAUGE	Baumer Technologies India Pvt. Ltd.	Mr. Shyam Warilani/Mr. V Suresh Babu 36, DAMJI SHAMJI INDUSTRIAL COMPLEX, OFF.-MAHAKALI CAVES ROAD, ANDHERI(E) MUMBAI Phone- +91 99589 25151 Pincode : 400093 Email : sales.in@baumer.com	Works-1->Mr. Shyam Warilani/Mr. V Suresh Babu Plot No 34 À GIDC À Phase 1, -VAPI-GUJARAT INDIA Phone- +91 11 4161 7111 FAX : 022 2687 3613 Pincode : 396 195 Email : pbajaj@baumer.com
29	PRESSURE GAUGE/ DIFF.PRESSURE GAUGE	H.GURU INSTRUMENTS (SOUTH INDIA) P. LTD	32,INDUSTRIAL SUBURB YESWANTHAPUR BANGALORE Phone- 080-23370300, Pincode : 560022 Email : info@hgurusouth.com	Works-1->Shikha Hazra/ Shyamal Hazra 32, Industrial Suburb,Yeshwanthpur -BANGALORE-KARNATAKA INDIA Phone- 080-23370300 FAX : 080-23379890 Pincode : 560022 Email : shikhahazra@hgurusouth.com
30	PRESSURE GAUGE/ DIFF.PRESSURE GAUGE	GAUGE BOURDON INDIA PVT. LTD.	194/195, Gopi Tank Road, Off Pandurang Naik Marg, Mahim Mumbai, Phone- 011-41607463, Pincode : 400016, Email : gicdelhi@general-gauges.com,	Works-1->Gauge Bourdon India Pvt. Ltd., Plot No-4, 5, 6,Jawahar Co-operative Industrial Estate, -Kalamboli Taluka Panvel-MAHARASHTRA India Phone- 022-27421095, FAX : 022-27421901, Pincode : 410209, Email : info@general-gauges.com
31	PRESSURE GAUGE/ DIFF.PRESSURE GAUGE	Nesstech Instruments Private Limited	26/2, G Type, Global Industrial Park Near Nahuli Railway Crossing, Valvada Vapi Phone- 9920576002 Pincode : 396105 Email : sales@nesstech.co.in	Works-1-> Others 26/2, G Type, Global Ind. Park Near Nahuli Railway Crossing, -Vapi-GUJARAT INDIA Phone- 9920576002 FAX : Pincode : 396105 Email : sales@nesstech.co.in, bkapadia@nesstech.co.in
32	PRESSURE GAUGE/ DIFF.PRESSURE GAUGE	SCIENTIFIC DEVICES (BOMBAY) PVT LTD,	Office no. 53, Shree Manoshi Complex, Plot No. 5 & 6, Sec-3, Ghansoli (East), Navi Mumbai, Phone- 9892230623, Pincode : 400 701, Email : sdbpl@vsnl.com	Works-1->Scientific Center, Others By-Pass Junction,Near Kalsekar College kausa, mumbra,Thane -Mumbai-MAHARASHTRA INDIA Phone- 022-25491409,9892230623 FAX : Pincode : 400612 Email : sdbpl@vsnl.com
33	LEVEL GAUGE	TOSHNIWAL BROTHERS PVT.LTD.	WORKS:TOSHNIWAL IND.PVT.LTD, INDUSTRIAL ESTATE MAKHUPURA, AJMER Phone- 441171 Pincode : 305002 Email : toshniwalprocess@gmail.com	
34	LEVEL GAUGE	BLISS ANAND PVT. LTD.	Mr. Vikas Anand/ Mr.RGRajan 92B & 93 B , IMT MANESAR Gurgaon Phone- 0124-4366000 TO 9 Pincode : 122001 Email : sales@blissanand.com	Works-1->Mr. Bharat Kumar/ Mr. Sasi Kumar Plot No. 92B & 93B,Sec-V, IMTManesar -GURGAON-HARYANA INDIA Phone- 0124-4366000 TO 9 FAX : 0124-2290884 Pincode : 122002 Email : bharat@blissanand .com
35	LEVEL GAUGE	SIGMA INSTRUMENTS CO.	Gopal Kannan/R Gopinath 201, ANANDRAJ INDUSTRIAL ESTATE, OFF.LBS MARG, SONAPUR LANE, BHANDUP (W) MUMBAI Phone- +919821038162 Pincode : 400078 Email : sales@sigmainstruments.co.in	Works-1->R Gopinath 27 Nahur Udyog Industrial Premises,M.M.Malviya Road, Mulund(-MUMBAI-MAHARASHTRA INDIA Phone- +912225918567 FAX : +912225918566 Pincode : 400080 Email : sales@sigmainstruments.co.in
36	TRANSMITTERS	TOSHNIWAL INDUSTRIES PVT. LTD.,	Industrial Estate, Makhupura, Ajmer, Phone- 9352009000, Pincode : 305002, Email : info@tipl.com,	Works-1-> Khasra No.: 218-230& 235, Industrial Estate,Makhupura, -Ajmer-RAJASTHAN India Phone- 9887865856, FAX : 0145-2695174, Pincode : 305002, Email : rajeev.gupta@tipl.com
37	TRANSMITTERS	YOKOGAWA INDIA LIMITED,	PLOT NO.96, ELECTRONICS CITY COMPLEX, HOSUR ROAD, BANGALORE, Phone- 080-41586000, Pincode : Email : uday.shankar@in.yokogawa.com,	Works-1-> PLOT NO.96, ELECTRONICS CITY COMPLEX, HOSUR ROAD, -BANGALORE-KARNATAKA INDIA Phone- 080-41586000, FAX : 080-28521442, Pincode : Email : uday.shankar@in.yokogawa.com
38	TRANSMITTERS	ABB INDIA LIMITED	MR. RAJIV GOVIL 14, MATHURA ROAD, FARIDABAD Phone- 09971085678 Pincode : 121003 Email : vipin.swami@in.abb.com	

39	TRANSMITTERS	V. AUTOMAT & INTRUMENTS (P) LTD.	Mr. R. K. BASSI/Mr. PRAVEEN KUMAR F-61, OKHLA INDL.AREA, PH-1 NEW DELHI Phone- 9810005826 Pincode : 110 020 Email : sales@vautomat.com	Works-1->Mr. BHAGWAN SINGH/ Mr. NANDAN SINGH F-61, OKHLA INDL.AREA,PHASE-I -NEW DELHI-DELHI INDIA Phone- 011-47627200 Extn. 3 FAX : 011- 26819440 Pincode : 110 020 Email : production@vautomat.com
40	TRANSMITTERS	Pune Techtrol Pvt. Ltd.	N.P.Khatan/Sudhakar Badiger S-18, MIDC Bhosari, Pune Phone- 9850560042 Pincode : 411 026 Email : ho@punetechtrol.com	
41	TRANSMITTERS	PANAM ENGINEERS	Mr. Santosh Shukla 203, Jaisingh Business,Parsiwada, Sahar road,Andheri(East), Mumbai, Phone- 9892179529, Pincode : 400099, Email : santosh@panamengineers.com	Works-1->Mr. Santosh Shukla Others R-628,TTC Industrial Area, MIDC Rabale, -Navi Mumbai-MAHARASHTRA India Phone- 9821350761, FAX : 022-27695559, Pincode : 400701, Email : sales@panamengineers.com
42	TRANSMITTERS	SBEM PVT. LTD.	MR.N.K. BEDARKAR/MR. VISHWANATH KARANDIK 39, ELECTRONIC CO.OP. ESTATE, PUNE SATARA ROAD PUNE, Phone- 912041030100 Pincode : 411009 Email : newdelhi@sbem.co.in	Works-1->MR. MOHAN PADWAL 691/A/2,BIBWEWADI INDL ESTATE -PUNE-MAHARASHTRA INDIA Phone- 918600042374 FAX : 912024215670 Pincode : 411037 Email : wm@sbem.co.in
43	TRANSMITTERS	Endress + Hauser (India) Pvt. Ltd.,	Mr. Prakash Vaghela 215-216, DLF Tower 'A', Jasola District Centre, New Delhi, Phone- 9717593001, Pincode : 110025, Email : prakash.vaghela@in.endress.com,	Works-1-> M-171 to 173, MIDC, Waluj, -Aurangabad-MAHARASHTRA India Phone- 9881000474, FAX : 0240-2555179, Pincode : 431136, Email : Narendra.Kulkarni@wetzer.endress.com
44	TRANSMITTERS	Moore Industries International Inc.	Leonard.W. Moore/ Matt Moren 16650 Schoenborn St. North Hills Phone- +1 818 830 5548 Pincode : 91343 Email : mmoren@miinet.com	Works-1->Matt Moren/Gina Cruz 16650 Schoenborn St., North Hills -CALIFORNIA- USA Phone- +1 818 894 7111, ext FAX : +1 818 830 5588 Pincode : 91343 Email : gcruz@miinet.com
45	TRANSMITTERS	EMERSON PROCESS MANAGEMENT (INDIA) PVT.LTD.	Mr. Amit Paithankar/Vikram Raj Singh 206-210,BALARAMA BUILDING 2ND FLR. BANDRA EAST MUMBAI Phone- 9619121500 Pincode : 400051 Email : vikramraj.singh@emerson.com	Works-1->Kalpesh Chandan/Hrishikesh Aghor Plot No. A 145/4 TTC IND AREA,MIDC, PAWANE, -NAVI MUMBAI-MAHARASHTRA INDIA Phone- 9619688001 FAX : 022-66736000 Pincode : 400 705 Email : Kalpesh.chandan@emerson.com
46	TRANSMITTERS	NIVO CONTROLS PVT. LTD.	Mr. Praveen Toshniwal 104-115, Electronic Complex, Indore Phone- 0731-4081305 Pincode : 452010 Email : sales@nivocontrols.com	Works-1->Mr. S L Sadani Others 104 -115,Electronic Complex -Indore-MADHYA PRADESH INDIA Phone- 0731-4081307 FAX : Pincode : 452010 Email : sales@nivocontrols.com;sadanis@nivocontrols.com
47	TRANSMITTERS	SMART INSTRUMENTS LTD, BRAZIL	Agents: Digital Electronic Ltd. 74/11 'C' Cross Road MIDC Andheri (East) MUMBAI Phone- 28208477 Pincode : 400093 Email : corp@delbby.rpgms.ems.vsnl.net.in	
48	TRANSMITTERS	SIEMENS LIMITED	Dr. Armin Bruck/Sandeep Mathur 130, Pandurang Budhkar Marg Worli Mumbai Phone- 0124 383 7377 Pincode : 400018 Email : ankit.varshney@siemens.com	Works-1->Ankit Varshney Kalwa Works, Thane-Belapur Road, Thane, -MUMBAI-MAHARASHTRA INDIA Phone- FAX : Pincode : 400708 Email :
49	TRANSMITTERS	Honeywell Automation India Limited	Mr. Ritwij Kulkarni 917, INTERNATIONAL TRADE TOWER, NEHRU PLACE, NEW DELHI Phone- 9890200584 Pincode : 110019 Email : rajesh.chaudhary@honeywell.com	Works-1->Mr.Kedar Tillu 53, 54, 56 & 57,Hadapsar Industrial Estate -PUNE-MAHARASHTRA INDIA Phone- 9665034625 FAX : 020 66039905 Pincode : 411013 Email : kedar.tillu@honeywell.com
50	SIGHT FLOW INDICATORS	V. AUTOMAT & INTRUMENTS (P) LTD.	Mr. R. K. BASSI/Mr. PRAVEEN KUMAR F-61, OKHLA INDL.AREA, PH-1 NEW DELHI Phone- 9810005826 Pincode : 110 020 Email : sales@vautomat.com	Works-1->Mr. BHAGWAN SINGH/ Mr. NANDAN SINGH F-34, OKHLA INDL.AREA,PHASE-I -NEW DELHI-DELHI INDIA Phone- 011-47627200 Extn. 3 FAX : 011- 26819440 Pincode : 110 020 Email : production@vautomat.com
51	SIGHT FLOW INDICATORS	SCIENTIFIC DEVICES (BOMBAY) PVT LTD,	Office no. 53, Shree Manoshi Complex, Plot No. 5 & 6, Sec-3, Ghansoli (East), Navi Mumbai, Phone- 9892230623, Pincode : 400 701, Email : sdbpl@vsnl.com	

52	SIGHT FLOW INDICATORS	BLISS ANAND PVT. LTD.	Mr. Vikas Anand/ Mr.RGRajan 92B & 93 B , IMT MANESAR Gurgaon Phone- 0124-4366000 TO 9 Pincode : 122001 Email : sales@blissanand.com	Works-1->Mr. Bharat Kumar/ Mr. Sasi Kumar Plot No. 240, Sector-3, HSIIDC, Bawal -Rewari-HARYANA INDIA Phone- 0124-4366000 TO 9 FAX : 0124-2290884 Pincode : 123501 Email : bharat@blissanand.com
53	SIGHT FLOW INDICATORS	B.K.EQUIPMENTS PVT.LTD.	T. BALAKRISHNAN/S.VENKATESH 217 , ARCOT ROAD PORUR , CHENNAI Phone- 9444057761 Pincode : 600116 Email : bkequip@gmail.com	Works-1->V.KARUNANIDHI/P.BABU 217 , ARCOT ROAD,PORUR , -CHENNAI-TAMIL NADU INDIA Phone- 9444131187 FAX : 044-24766852 Pincode : 600116 Email : bkequip@gmail.com
54	SIGHT FLOW INDICATORS	SIGMA INSTRUMENTS CO.	Gopal Kannan/R Gopinath 201, ANANDRAJ INDUSTRIAL ESTATE, OFF.LBS MARG, SONAPUR LANE, BHANDUP (W) MUMBAI Phone- +919821038162 Pincode : 400078 Email : sales@sigmainstruments.co.in	Works-1->R Gopinath 27 Nahur Udyog Industrial Premises,M.M.Malviya Road, Mulund(-MUMBAI-MAHARASHTRA INDIA Phone- +912225918567 FAX : +912225918566 Pincode : 400080 Email : sales@sigmainstruments.co.in
55	SIGHT FLOW INDICATORS	INSTRUMENTATION ENGINEERS PVT LTD	SH.N.V.RAM GOPAL/MS. N.NIHARIKA PLOTS 1,2,3, PHASE-III, IDA, JEEDIMETLA HYDERABAD Phone- 9848407365 Pincode : 500055 Email : iedelhi@ieflowmeters.com	Works-1->MR. A.V.MURTHY/MR. K.T. RAVISANKER PLOTS 1,2,3, PHASE-III,IDA, JEEDIMETLA -HYDERABAD-TELANGANA INDIA Phone- 9885107312 FAX : 040-23096401 Pincode : 500055 Email : sales@ieflowmeters.com
56	DIFFERENTIAL PRESSURE SWITCH	SOR INC.	LARRY DEGARMO/Avdhesh Chandra, 14685 W. 105TH STREET LENEXA Phone- 09810905139, Pincode : 66215 Email : Ldegarmo@sorinc.com, avdhesh@sherman-india.com	
57	JUNCTION BOX	K.S.INSTRUMENTS PVT.LTD.	S Raghavan No. 72, 3rd Main, 1st Stage Industrial Suburb, Yeshwanthpur Bangalore Phone- 9880385770 Pincode : 560022 Email : sales1@ksinstruments.net	
58	JUNCTION BOX	SUCHITRA INDUSTRIES	NO-2,OPP-27 AECS LAYOUT 2ND STG REJAMAHALVILAS EXTN 2ND STG BANGALORE Phone- Pincode : Email : suchitra.industriesblr@gmail.com	Works-1->B. Srinivas Suchitra Industries, Opp No 53, Muneshwara Black Devinagar, Lottagal hal -BANGALORE-KARNATAKA INDIA Phone- 080-23511247 FAX : Pincode : 560094 Email : suchitra_industries@yahoo.com
59	JUNCTION BOX	FLEXPRO ELECTRICALS PVT. LTD.	Mr. Dineshbhai Zaveri C-1/ 27&37, GIDC, Kabilpore, Navsari Phone- 02637-265140,265003 Pincode : 396424 Email : flexpro@flexproltd.com	Works-1->Mr. Dineshbhai Zaveri CEO C-1/ 27&37, GIDC, Kabilpore, -Navsari-GUJARAT INDIA Phone- 02637-265140,265003 FAX : 02637-265308 Pincode : 396424 Email : flexpro@flexproltd.com
60	JUNCTION BOX	Shrenik & Company,	Mr. Mitesh Shah/Mr. Pulin Shah 39 A/3 ,Panchratna Industrial Estate, Sarkhej-Bavla Road Ahmedabad Phone- 9825024921 Pincode : 382213 Email : sales@pustron.com, pulin@sumip.com	Works-1->Mr.Pulin Shah/ Mr. Kaloesh Parmar 39 A/3 ,Panchratna Industrial Est,Sarkhej-Bavla Road, Changodhar -Ahmedabad-GUJARAT INDIA Phone- 98250 80339 1 FAX : 079-26932424 Pincode : 382213 Email : sales@sumip.com
61	JUNCTION BOX	AJMERA INDUSTRIAL & ENGINEERING WORKS	JIGNESH MAHENDRA AJMERA DENA BANK BLDG.,SHREE NAGESH INDL. ESTATE,STATION ROAD, MUMBAI Phone- 022 67973578 Pincode : 400 088 Email : ajmera@ajmera.net, jmajmera@yahoo.com	Works-1->JIGNESH MAHENDRA AJMERA DENA BANK BLDG., SHREE NAGESHINDL. ESTATE,STATION ROAD, -MUMBAI-MAHARASHTRA INDIA Phone- 022 67973578 FAX : Pincode : 400 088 Email : ajmera@ajmera.net
62	INSTRUMENTS TUBE FITTINGS	VIKAS INDUSTRIAL PRODUCTS	S.R.SINGH/NAVEEN SINGH B - 2, SECTOR - 6, NOIDA Phone- +91-9810122070 Pincode : 201301 Email : naveensingh@vsnl.com	Works-1->S.R.SINGH/ NAVEEN SINGH B - 2, SECTOR - 6, -NOIDA-UTTAR PRADESH INDIA Phone- 0120-4352940 FAX : 0120-4352940 Pincode : 201301 Email : naveensingh@vsnl.com
63	INSTRUMENTS TUBE FITTINGS	AURA INCORPORATED	NIRAJ SHARAN/SUJIT KUMAR W-167A, GREATER KAILASH-II NEW DELHI Phone- 9810182430 Pincode : 110048 Email : niraj@aurainc.com	
64	INSTRUMENTS TUBE FITTINGS	PRECISION ENGINEERING INDUSTRIES	K. SITARAM/ K. SRINIVAS 7,SIDHAPURA INDUSTRIAL ESTATE S.V. ROAD,GOREGAON(W) MUMBAI Phone- 022 42631700 Pincode : 400 062 Email : peiks@vsnl.com	Works-1->ALEX BAPTIST/ K. SRINIVAS 7. SIDHAPURA INDUSTRIAL ESTATE,SV ROAD, GOREGAON(WEST) -MUMBAI-MAHARASHTRA INDIA Phone- 022-42631700 FAX : 022-40035259 Pincode : 400 062 Email : srinivas@precision-engg.com

65	INSTRUMENTS TUBE FITTINGS	Fluid Controls Pvt. Ltd.	Sophie Y. Moochhala/Mayur Rajput J.V.PATEL, I.T.I CMPD, B.MADHUKAR MARG, ELPHINSTONE ROADSTN.(WR), MUMBAI Phone- (022) 43338000 Pincode : 400013 Email : sales@fluidcontrols.com	Works-1->Mr. Tansen Choudhari/Mr. Mahesh Darekar Shed No.8, Lonavla Indl.Co-op.Estate Ltd,Nagargaon, -Lonavla-MAHARASHTRA INDIA Phone- 9823951347 FAX : (02114) 271132 Pincode : 410 401 Email : factory@hyd-air.com
66	LEVEL SWITCH-CAPACITANCE TYPE	SIGMA INSTRUMENTS CO.	Gopal Kannan/R Gopinath 201, ANANDRAJ INDUSTRIAL ESTATE, OFF.LBS MARG, SONAPUR LANE, BHANDUP (W) MUMBAI Phone- +919821038162 Pincode : 400078 Email : sales@sigmainstruments.co.in	Works-1->R Gopinath 27 Nahur Udyog Industrial Premises,M.M.Malviya Road, Mulund(-MUMBAI-MAHARASHTRA INDIA Phone- +912225918567 FAX : +912225918566 Pincode : 400080 Email : sales@sigmainstruments.co.in
67	LEVEL SWITCH-CAPACITANCE TYPE	V. AUTOMAT & INTRUMENTS (P) LTD.	Mr. R. K. BASSI/Mr. PRAVEEN KUMAR F-61, OKHLA INDL.AREA, PH-1 NEW DELHI Phone- 9810005826 Pincode : 110 020 Email : sales@vautomat.com	Works-1->Mr. BHAGWAN SINGH/ Mr. NANDAN SINGH F-61, OKHLA INDL.AREA,PHASE-I -NEW DELHI-DELHI INDIA Phone- 011-47627200 Extn. 3 FAX : 011- 26819440 Pincode : 110 020 Email : production@vautomat.com
68	LEVEL SWITCH-CAPACITANCE TYPE	SCIENTIFIC DEVICES (BOMBAY) PVT LTD,	Office no. 53, Shree Manoshi Complex, Plot No. 5 & 6, Sec-3, Ghansoli (East), Navi Mumbai, Phone- 9892230623, Pincode : 400 701, Email : sdbpl@vsnl.com	Works-1->Scientific Center, Others By-Pass Junction,Near Kalsekar College kausa, mumbra,Thane -Mumbai-MAHARASHTRA INDIA Phone- 022-25491409,9892230623 FAX : Pincode : 400612 Email : sdbpl@vsnl.com
69	LEVEL SWITCH-CAPACITANCE TYPE	Pune Techtrol Pvt. Ltd.	N.P.Khatan/Sudhakar Badiger S-18, MIDC Bhosari, Pune Phone- 9850560042 Pincode : 411 026 Email : ho@punetechtrol.com	
70	LEVEL SWITCH-CAPACITANCE TYPE	LEVCON INSTRUMENTS PVT. LTD.	Mr Shayak Gupta/Badal Jana Rajkamal', 7th floor, 13, Camac Street KOLKATA Phone- 0 33 2283 2766 Pincode : 700017 Email : b.jana@levcongroup.com	
71	LEVEL SWITCH-CAPACITANCE TYPE	Baumer Technologies India Pvt. Ltd.	Mr. Shyam Warilani/Mr. V Suresh Babu 36, DAMJI SHAMJI INDUSTRIAL COMPLEX, OFF.-MAHAKALI CAVES ROAD, ANDHERI(E) MUMBAI Phone- +91 99589 25151 Pincode : 400093 Email : sales.in@baumer.com	Works-1->Mr. Shyam Warilani/Mr. V Suresh Babu Plot No 34 À GIDC À Phase 1, -VAPI-GUJARAT INDIA Phone- +91 11 4161 7111 FAX : 022 2687 3613 Pincode : 396 195 Email : pbajaj@baumer.com
72	LEVEL SWITCH-CONDUTIVITY TYPE	Sapcon Instrument Pvt Ltd.	131, PALSHIKAR COLONY Contact Person- Mr. Ashwin (9826080207) INDORE Phone- +91-731-4085751, Pincode : 452004 Email : sales@sapconinstruments.com	Works-1->Mr. Ashwin R Palshikar/Mr. Navin Bodse 131 PALSHIKAR COLONY, -INDORE-MADHYA PRADESH INDIA Phone- 9754261005 FAX : 0731-2475475 Pincode : 452004 Email : sales@sapcon.in
73	LEVEL SWITCH-CONDUTIVITY TYPE	LEVCON INSTRUMENTS PVT. LTD.	Mr Shayak Gupta/Badal Jana Rajkamal', 7th floor, 13, Camac Street KOLKATA Phone- 0 33 2283 2766 Pincode : 700017 Email : b.jana@levcongroup.com	Works-1-> 38G, PICNIC GARDEN ROAD, -KOLKATA-WEST BENGAL INDIA Phone- FAX : Pincode : Email :
74	LEVEL SWITCH-CONDUTIVITY TYPE	BLISS ANAND PVT. LTD.	Mr. Vikas Anand/ Mr.RGRajan 92B & 93 B , IMT MANESAR Gurgaon Phone- 0124-4366000 TO 9 Pincode : 122001 Email : sales@blissanand.com	Works-1->Mr. Bharat Kumar/ Mr. Sasi Kumar Plot No. 92B & 93B,Sec-V, IMTManesar -GURGAON-HARYANA INDIA Phone- 0124-4366000 TO 9 FAX : 0124-2290884 Pincode : 122002 Email : bharat@blissanand .com
75	LEVEL SWITCH-CONDUTIVITY TYPE	V. AUTOMAT & INTRUMENTS (P) LTD.	Mr. R. K. BASSI/Mr. PRAVEEN KUMAR F-61, OKHLA INDL.AREA, PH-1 NEW DELHI Phone- 9810005826 Pincode : 110 020 Email : sales@vautomat.com	Works-1->Mr. BHAGWAN SINGH/ Mr. NANDAN SINGH F-61, OKHLA INDL.AREA,PHASE-I -NEW DELHI-DELHI INDIA Phone- 011-47627200 Extn. 3 FAX : 011- 26819440 Pincode : 110 020 Email : production@vautomat.com
76	LEVEL SWITCH-CONDUTIVITY TYPE	HI-TECH SYSTEMS & SERVICES LTD.	Mr. Vikash Agrawal/Mr. Tarun Debnath 119, PARK STREET , KOLKATA Phone- 033-22290045 Pincode : 700016 Email : sandeep@hitech.in	Works-1->Mr. Jitendra Kumar/Mr. Debasis Dey 82/1, Sarsuna Main Road, -KOLKATA-WEST BENGAL INDIA Phone- 9883994030 FAX : Pincode : 700061 Email : jitendra@hitech.in
77	LEVEL SWITCH-CONDUTIVITY TYPE	RAMAN INSTRUMENTS PVT.LTD.	Mr. N R Shenoy/Mr G B Vijh 8, First Floor.Plot : 160A Bait-Ush-Sharaf, 29th Road,Bandra(W) MUMBAI Phone- 09892331381 Pincode : 400050 Email : ramanbpl@vsnl.com	Works-1->NA -- Phone- FAX : Pincode : Email :

78	LEVEL SWITCH-CONDUTIVITY TYPE	SIGMA INSTRUMENTS CO.	Gopal Kannan/R Gopinath 201, ANANDRAJ INDUSTRIAL ESTATE, OFF.LBS MARG, SONAPUR LANE, BHANDUP (W) MUMBAI Phone- +919821038162 Pincode : 400078 Email : sales@sigmainstruments.co.in	Works-1->R Gopinath 27 Nahur Udyog Industrial Premises,M.M.Malviya Road, Mulund(-MUMBAI-MAHARASHTRA INDIA Phone- +912225918567 FAX : +912225918566 Pincode : 400080 Email : sales@sigmainstruments.co.in
79	LEVEL SWITCH-CONDUTIVITY TYPE	SOR INC.	LARRY DEGARMO/Avdhesh Chandra, 14685 W. 105TH STREET LENEXA Phone- 09810905139, Pincode : 66215 Email : Ldegarmo@sorinc.com, avdhesh@sherman-india.com	Works-1->LARRY DEGARMO/ ROY STUMBOUGH 14685 W. 105TH STREET, LENEXA -KANSAS- USA Phone- 913-888-0767 FAX : 913-888-0767 Pincode : 66215 Email : rstumbough@sorinc.com
80	LEVEL SWITCH-FLOAT TYPE	Pune Techtrol Pvt. Ltd.	N.P.Khatan/Sudhakar Badiger S-18, MIDC Bhosari, Pune Phone- 9850560042 Pincode : 411 026 Email : ho@punetechtrol.com	
81	LEVEL SWITCH-FLOAT TYPE	D.K. INSTRUMENTS PVT.LTD.	N.SIKDAR/ SUMIT SIKDAR 76/2,SELIMPUR RD DHAKURIA Kolkata Phone- 033-2415-1310. Pincode : 700031 Email : dkinst@vsnl.net	
82	LEVEL SWITCH-FLOAT TYPE	V. AUTOMAT & INTRUMENTS (P) LTD.	Mr. R. K. BASSI/Mr. PRAVEEN KUMAR F-61, OKHLA INDL.AREA, PH-1 NEW DELHI Phone- 9810005826 Pincode : 110 020 Email : sales@vautomat.com	Works-1->Mr. BHAGWAN SINGH/ Mr. NANDAN SINGH F-61, OKHLA INDL.AREA,PHASE-I -NEW DELHI-DELHI INDIA Phone- 011-47627200 Extn. 3 FAX : 011- 26819440 Pincode : 110 020 Email : production@vautomat.com
83	LEVEL SWITCH-FLOAT TYPE	SCIENTIFIC DEVICES (BOMBAY) PVT LTD,	Office no. 53, Shree Manoshi Complex, Plot No. 5 & 6, Sec-3, Ghansoli (East), Navi Mumbai, Phone- 9892230623, Pincode : 400 701, Email : sdbpl@vsnl.com	Works-1->Scientific Center, Others By-Pass Junction,Near Kalsekar College kausa, mumbra,Thane -Mumbai-MAHARASHTRA INDIA Phone- 022-25491409,9892230623 FAX : Pincode : 400612 Email : sdbpl@vsnl.com
84	LEVEL SWITCH-FLOAT TYPE	LEVCON INSTRUMENTS PVT. LTD.	Mr Shayak Gupta/Badal Jana Rajkamal', 7th floor, 13, Camac Street KOLKATA Phone- 0 33 2283 2766 Pincode : 700017 Email : b_jana@levcongroup.com	
85	LEVEL SWITCH-FLOAT TYPE	GENERAL INSTRUMENTS CONSORTIUM	Mr. Amarendra Kulkarni 194/195, Gopi Tank Road, Off. Pandurang Naik Marg, Mahim Mumbai Phone- 9323195251 Pincode : 400016 Email : amarendra@general-gauges.com	
86	LEVEL SWITCH-FLOAT TYPE	SBEM PVT. LTD.	MR.N.K. BEDARKAR/MR. VISHWANATH KARANDIK 39, ELECTRONIC CO.OP. ESTATE, PUNE SATARA ROAD PUNE, Phone- 912041030100 Pincode : 411009 Email : newdelhi@sbem.co.in	Works-1->MR. MOHAN PADWAL 691/A/2,BIBWEWADI INDL ESTATE -PUNE-MAHARASHTRA INDIA Phone- 918600042374 FAX : 912024215670 Pincode : 411037 Email : wm@sbem.co.in
87	LEVEL SWITCH-FLOAT TYPE	Baumer Technologies India Pvt. Ltd.	Mr. Shyam Warilani/Mr. V Suresh Babu 36, DAMJI SHAMJI INDUSTRIAL COMPLEX, OFF.-MAHAKALI CAVES ROAD, ANDHERI(E) MUMBAI Phone- +91 99589 25151 Pincode : 400093 Email : sales.in@baumer.com	Works-1->Mr. Shyam Warilani/Mr. V Suresh Babu Plot No 34 À GIDC À Phase 1, -VAPI-GUJARAT INDIA Phone- +91 11 4161 7111 FAX : 022 2687 3613 Pincode : 396 195 Email : pbajaj@baumer.com
88	LEVEL SWITCH-FLOAT TYPE	SIGMA INSTRUMENTS CO.	Gopal Kannan/R Gopinath 201, ANANDRAJ INDUSTRIAL ESTATE, OFF.LBS MARG, SONAPUR LANE, BHANDUP (W) MUMBAI Phone- +919821038162 Pincode : 400078 Email : sales@sigmainstruments.co.in	Works-1->R Gopinath 27 Nahur Udyog Industrial Premises,M.M.Malviya Road, Mulund(-MUMBAI-MAHARASHTRA INDIA Phone- +912225918567 FAX : +912225918566 Pincode : 400080 Email : sales@sigmainstruments.co.in
89	LEVEL SWITCH-FLOAT TYPE	SOR INC.	LARRY DEGARMO/Avdhesh Chandra, 14685 W. 105TH STREET LENEXA Phone- 09810905139, Pincode : 66215 Email : Ldegarmo@sorinc.com, avdhesh@sherman-india.com	Works-1->LARRY DEGARMO/ ROY STUMBOUGH 14685 W. 105TH STREET, LENEXA -KANSAS- USA Phone- 913-888-0767 FAX : 913-888-0767 Pincode : 66215 Email : rstumbough@sorinc.com
90	INSTRUMENTS PIPE FITTINGS	PRECISION ENGINEERING INDUSTRIES	K. SITARAM/ K. SRINIVAS 7,SIDHAPURA INDUSTRIAL ESTATE S.V. ROAD,GOREGAON(W) MUMBAI Phone- 022 42631700 Pincode : 400 062 Email : peiks@vsnl.com	Works-1->ALEX BAPTIST/ K. SRINIVAS 7. SIDHAPURA INDUSTRIAL ESTATE,SV ROAD, GOREGAON(WEST) -MUMBAI-MAHARASHTRA INDIA Phone- 022-42631700 FAX : 022-40035259 Pincode : 400 062 Email : srinivas@precision-engg.com

91	INSTRUMENTS PIPE FITTINGS	AURA INCORPORATED	NIRAJ SHARAN/SUJIT KUMAR W-167A, GREATER KAILASH-II NEW DELHI Phone- 9810182430 Pincode : 110048 Email : niraj@aurainc.com	
92	INSTRUMENTS PIPE FITTINGS	VIKAS INDUSTRIAL PRODUCTS	S.R.SINGH/NAVEEN SINGH B - 2, SECTOR - 6, NOIDA Phone- +91-9810122070 Pincode : 201301 Email : naveensingh@vsnl.com	Works-1->S.R.SINGH/ NAVEEN SINGH B - 2, SECTOR - 6, -NOIDA-UTTAR PRADESH INDIA Phone- 0120-4352940 FAX : 0120-4352940 Pincode : 201301 Email : naveensingh@vsnl.com
93	INSTRUMENTS PIPE FITTINGS	Fluid Controls Pvt. Ltd.	Sophie Y. Moochhala/Mayur Rajput J.V.PATEL, I.T.I CMPD, B.MADHUKAR MARG, ELPHINSTONE ROADSTN.(WR), MUMBAI Phone- (022) 43338000 Pincode : 400013 Email : sales@fluidcontrols.com	Works-1->Mr. Tansen Choudhari/Mr. Mahesh Darekar Shed No.8, Lonavla Indl.Co-op.Estate Ltd,Nagargaon, -Lonavla-MAHARASHTRA INDIA Phone- 9823951347 FAX : (02114) 271132 Pincode : 410 401 Email : factory@hyd-air.com
94	INSTRUMENT FITTINGS	HP VALVES & FITTINGS INDIA PVT. LTD.	S. Harichandran/P.S. Pandi B-11, Mugappair Industrial Estate, CHENNAI Phone- 044 26252537 Pincode : 600037 Email : sales@hpvalvesindia.com	Works-1->S. Harichandran/ P.S. Pandi B-11, Mugappair Industrial Estate, -CHENNAI-TAMIL NADU INDIA Phone- 044-25252537 FAX : 044-26252538 Pincode : 600037 Email : sales@hpvalvesindia.com
95	INSTRUMENT FITTINGS	Perfect Instrumentation Control (India) Pvt. Ltd.	MD Hussain Shaikh/Shahanawaz Khan Gala No. 168, Loheki Chwal,216/ 218, Maulana Azad Rd. Nagpada Junction Mumbai Phone- 91-9324383121 Pincode : 400008 Email : shahanawaz.khan@perfectinstrumentation.com	Works-1->Shahanawaz Khan Vishweshwar Ind. Premises Co-op Soc. Ltd,F-18/19, Pradhikaran,Bhosadi MIDC -PUNE-MAHARASHTRA INDIA Phone- 020-30694134 FAX : 022-23013010 Pincode : 411026 Email : shahanawaz.khan@perfectinstrumentation.com
96	INSTRUMENT FITTINGS	Comfit & Valve Pvt. Ltd.	Mr. Jeetu Jain/Mr. Vinay Sosa Survey No. 23/1, Part 2, Ahmedabad-Mehsana Highway Laxmipura, Nandasan Phone- 02764-267036/37 Pincode : 382705 Email : marketing@com-fit.com	Works-1->Miss Sonal Pithadia/Miss Pavan Chavda Survey No. 23/1, Part 2, Ahmedabad-Mehsana Highway, Laxmipura -Nandasan-GUJARAT INDIA Phone- 8460848087 FAX : 2764-267036/37 Pincode : 382705 Email : domestic@com-fit.com
97	INSTRUMENT FITTINGS	Arya Crafts & Engineering Pvt. Ltd.	Mr.Sanjay Brahman/Mr.Shyam Vazirani 102, Vora Industrial Estate No.4 Navghar, Vasai Road (E) Dist.Thane, Mumbai Phone- +91-250-2392246 Pincode : 401210 Email : arya@aryaengg.com	
98	INSTRUMENT FITTINGS	FLUIDFIT ENGINEERS PVT. LTD.	Mr. Abbas Bhola Potia Building No. 2, Office No. 3,292, Bellasis Road,Mumbai Central (East) Mumbai Phone- 9920044113 Pincode : 400008 Email : ab@fluidfitengg.com	Works-1->Mr. Abbas Bhola Unit No. 16, Supreme Industrial Estate,Kaman Bhiwandi Road,Devdal, -Vasai East-MAHARASHTRA India Phone- 9920044113 FAX : 07303178243 Pincode : 401208 Email : ab@fluidfitengg.com
99	INSTRUMENT FITTINGS	VIKAS INDUSTRIAL PRODUCTS	S.R.SINGH/NAVEEN SINGH B - 2, SECTOR - 6, NOIDA Phone- +91-9810122070 Pincode : 201301 Email : naveensingh@vsnl.com	Works-1->S.R.SINGH/ NAVEEN SINGH B - 2, SECTOR - 6, -NOIDA-UTTAR PRADESH INDIA Phone- 0120-4352940 FAX : 0120-4352940 Pincode : 201301 Email : naveensingh@vsnl.com
100	INSTRUMENT FITTINGS	Fluid Controls Pvt. Ltd.	Sophie Y. Moochhala/Mayur Rajput J.V.PATEL, I.T.I CMPD, B.MADHUKAR MARG, ELPHINSTONE ROADSTN.(WR), MUMBAI Phone- (022) 43338000 Pincode : 400013 Email : sales@fluidcontrols.com	Works-1->Mr. Tansen Choudhari/Mr. Mahesh Darekar Shed No.8, Lonavla Indl.Co-op.Estate Ltd,Nagargaon, -Lonavla-MAHARASHTRA INDIA Phone- 9823951347 FAX : (02114) 271132 Pincode : 410 401 Email : factory@hyd-air.com
101	INSTRUMENT FITTINGS	PANAM ENGINEERS	Mr. Santosh Shukla 203, Jaisingh Business,Parsiwada, Sahar road,Andheri(East), Mumbai, Phone- 9892179529, Pincode : 400099, Email : santosh@panamengineers.com	Works-1->Mr. Santosh Shukla Others R-628,TTC Industrial Area, MIDC Rabale, -Navi Mumbai-MAHARASHTRA India Phone- 9821350761, FAX : 022-27695559, Pincode : 400701, Email : sales@panamengineers.com
102	INSTRUMENT FITTINGS	AURA INCORPORATED	NIRAJ SHARAN/SUJIT KUMAR W-167A, GREATER KAILASH-II NEW DELHI Phone- 9810182430 Pincode : 110048 Email : niraj@aurainc.com	
103	INSTRUMENT FITTINGS	PRECISION ENGINEERING INDUSTRIES	K. SITARAM/ K. SRINIVAS 7,SIDHAPURA INDUSTRIAL ESTATE S.V. ROAD,GOREGAON(W) MUMBAI Phone- 022 42631700 Pincode : 400 062 Email : peiks@vsnl.com	Works-1->ALEX BAPTIST/ K. SRINIVAS 7. SIDHAPURA INDUSTRIAL ESTATE,SV ROAD, GOREGAON(WEST) -MUMBAI-MAHARASHTRA INDIA Phone- 022-42631700 FAX : 022-40035259 Pincode : 400 062 Email : srinivas@precision-engg.com